Disk Setting

Chapter 1 Overview of Disk Settings ····· DSKST 01-0000

Chapter 2 Disk Setting for AMS2000 Series, MSS, and HUS100 series ····· DSKST 02-0000

Chapter 3 Disk Setting for USP V, USP VM, VSP, VSP G1000, VSP Gx00/VSP Fx00, and HUS VM ····· DSKST 03-0000

Chapter 4 Disk Array Subsystem Connection Specifications for Each Model ····· DSKST 04-0000

Copyright © 2010, 2016, Hitachi, Ltd.

This page is for editorial purpose only.

Copyright © 2010, Hitachi, Ltd.

Chapter 1 Overview of Disk Settings

When you connect the Hitachi Data Ingestor node to the disk array subsystem, various types of settings such as LU (Logical Unit) creation, port setting, and LUN Manager setting are necessary in the disk array subsystem.

For detailed settings of the disk array subsystem of AMS2000 series, MSS, and HUS100 series refer to
Disk Setting “Chapter 2 Disk Setting for AMS2000 series, MSS, and HUS100 series” (DSKST 02-0000) and
Disk Setting “4.1 Setting Example of AMS2000 Series, MSS, and HUS100 series” (DSKST 04-0000).

For detailed settings disk array subsystem of USP V, USP VM, VSP, VSP G1000, VSP Gx00/VSP Fx00, or HUS VM, refer to
Disk Setting “Chapter 3 Disk Setting for USP V, USP VM, VSP, VSP G1000, VSP Gx00/VSP Fx00, and HUS VM” (DSKST 03-0000) and Disk Setting “4.2 Setting Example of USP V, USP VM, VSP, VSP G1000, VSP Gx00/VSP Fx00, and HUS VM” (DSKST 04-0060).

Set disks by referring to the following sections for overview of the disk setting procedures, as well as by referring to the chapters for disk setting procedures.

1.1 Overview of Disk Setting Procedures for AMS2000 Series, MSS, and HUS100 Series

Set and confirm the disk array subsystem operations.
Disk Setting “2.1 Setting and Confirming the Disk Array Subsystem” (DSKST 02-0010)

↓

Set and confirm LUs used in Hitachi Data Ingestor.
Disk Setting “2.2 Setting and Confirming LUs used in Hitachi Data Ingestor” (DSKST 02-0030)

↓

Acquire WWNs of both nodes. (*1)
Disk Setting “2.3 Acquiring WWNs of Nodes” (DSKST 02-0090)

↓

Set and confirm system parameters.
Disk Setting “2.4 Setting and Confirming System Parameters” (DSKST 02-0110)

↓

Set and confirm the LUN Manager.
Disk Setting “2.5 Setting and Confirming the LUN Manager” (DSKST 02-0140)

*1: In single node configuration, one node acquires the WWN.

Copyright © 2010, 2016, Hitachi, Ltd.

1.2 Overview of Disk Setting Procedures for USP V, USP VM, VSP, VSP G1000, VSP Gx00/VSP Fx00, and HUS VM

Set and confirm the disk array subsystem operations.
Disk Setting “3.1 Setting and Confirming for the use of Disk Array Subsystem” (DSKST 03-0010)

Set and confirm the system LUs used in Hitachi Data Ingestor.
Disk Setting “3.2 Setting and Confirming LUs used in Hitachi Data Ingestor” (DSKST 03-0020)

Acquire WWNs of both nodes. (*1)
Disk Setting “3.3 Acquiring WWNs of Nodes” (DSKST 03-0050)

Set and confirm system parameters.
Disk Setting “3.4 Setting and Confirming System Parameters” (DSKST 03-0070)

Set and confirm the LUN Manager.
Disk Setting “3.5 Setting and Confirming the LUN Manager” (DSKST 03-0080)

*1: In single node configuration, one node acquires the WWN.

Copyright © 2010, 2016, Hitachi, Ltd.

Chapter 2 Disk Setting for AMS2000 Series, MSS, and HUS100 Series

2.1 Setting and Confirming the Disk Array Subsystem
2.2 Setting and Confirming LUs used in Hitachi Data Ingestor
2.3 Acquiring WWNs of Nodes
2.4 Setting and Confirming System Parameters
2.5 Setting and Confirming the LUN Manager

The settings of Sections 2.1 through 2.5 are necessary for both of the on-site setting and the factory setting.

- When you use the AMS2000 series, the MSS, and the HUS100 series as the Hitachi Data Ingestor disk array subsystem, you need to install the “LUN Manager” optional product. For using the AMS2000 series, the MSS, and the HUS100 series as the Hitachi Data Ingestor disk array subsystem, the user LU for file sharing can be created by the Hitachi File Services Manager which is the software for the administrator of Hitachi Data Ingestor. To create a user LU for file sharing, you need to enable the “mapping mode” and “host group security mode” in the “LUN Manager” functions.

- Software used for disk setting and management
  Follow the table below on Hitachi Storage Navigator Modular 2 to be used for disk setting and management of the AMS2000 series, the MSS, and the HUS100 series.
  Also refer to “Hitachi Storage Navigator Modular 2 (for GUI) User’s Guide” (hereinafter called HSNM2 User’s Guide) for details on Hitachi Storage Navigator Modular 2.

Device name/Series name		Model name	Software
DF800	-RKEXS	MSS	Hitachi Storage Navigator Modular 2
	-RKS	AMS2100	
	-RKES		
	-RKM	AMS2300	
	-RKEM		
	-RKH	AMS2500	
	-RKEH		
DF850	-CBXSL	HUS110	
	-CBXSS		
	-CBSL	HUS130	
	-CBSS		
	-CBL	HUS150	

Copyright © 2010, 2012, Hitachi, Ltd.

2.1 Setting and Confirming the Disk Array Subsystem

Perform settings and confirmation to use Hitachi Storage Navigator Modular 2 (hereinafter referred to as HSNM2) by using a maintenance PC.
As the disk array subsystem to be connected to Hitachi Data Ingestor is the AMS2000 Series, the MSS, and the HUS100 series, prepare “HSNM2 User’s Guide”, “LUN Manager User’s Guide”, and “Dynamic Provisioning User’s Guide” for settings and confirming the disk array subsystem.
When the disk array subsystem is HUS110, also prepare “Fibre Channel Option User’s Guide.”

(1) Maintenance PC
Prepare a maintenance PC to operate HSNM2.

(2) Connecting the maintenance PC
Connect the maintenance PC to the disk array subsystem to be operated.
The connection methods are connecting the maintenance PC and the disk array subsystem via the management LAN IP-SW which can be performed in case (HDS) provides the management LAN IP-SW and the method connecting the maintenance PC and the disk array subsystem directly.
When connecting the maintenance PC and the disk array subsystem via the management LAN IP-SW, refer to “Installation ‘1.1.8 Connecting the LAN cable 1.1.8.1 In the case of Cluster Configuration (2) Connecting the private maintenance ports’ (INST01-0130)”, and connect the maintenance PC to the free ports among the port 19 to 22 allocated to the Private Maintenance LAN of the management LAN IP-SW. Furthermore, using the LAN cables, connect Port 23, Port 24 and the maintenance ports of both controllers of the disk array subsystem.

(3) Installing and updating HSNM2
Install the latest version of HSNM2 or update HSNM2 to the latest version.
Check the version by referring to “HSNM2 User’s Guide”.

(a) If HSNM2 is not installed in the maintenance PC
Install it by referring to “HSNM2 User’s Guide”.

(b) If the version of HSNM2 installed in the maintenance PC is not the latest
Update it by referring to “HSNM2 User’s Guide”.

(c) If the version of HSNM2 installed in the maintenance PC is the latest
Proceed to step (4).

(4) Registering the disk array subsystem
Start HSNM2, and register the disk array subsystem to operate.

(a) If the disk array subsystem is not registered to HSNM2
Register the disk array subsystem by referring to “HSNM2 User’s Guide”.

(b) If the disk array subsystem is registered to HSNM2
Proceed to step (5).

(5) Starting the operation window on the disk array subsystem
A unit window of the disk array subsystem to be operated is displayed.
Display the unit window of the disk array subsystem to be operated by referring to “HSNM2 User’s Guide”.

Copyright © 2010, 2014, Hitachi, Ltd.

(6) Setting and confirming prices options
When the disk array subsystem is HUS110, perform (a), and then perform (b.)
Otherwise HUS110, perform only (b.)

(a) To use the Fibre Channel interface, the “Fibre Channel Option” license is required.
Check whether the “Fibre Channel Option” license is set to “enabled” by referring to “HSNM2 User’s Guide.”

① If the “Fibre Channel Option” is not displayed
Unlock the license by referring to “HSNM2 User’s Guide” or “Fibre Channel Option User’s Guide.”

② If the “Fibre Channel Option” license is set to “disabled”
Set the license to “enabled” by referring to “HSNM2 User’s Guide” or “Fibre Channel Option User’s Guide.”

③ If the “Fibre Channel Option” is set to “enabled”, or if you have set the license to “enabled” at step (a-1) or (a-2), proceed to (b.)

(b) If you create LUs using Dynamic Provisioning pool (Here in after refered to as “DP pool”) or in the single node configuration using the disk array subsystem, perform (6-1). Other than that, perform (6-2.)

Copyright © 2010, 2012, Hitachi, Ltd.

(6-1) LU creation using DP pool

NOTE: To use Dynamic Provisioning of AMS 2000 series/MSS, the Micro-code of AMS 2000 series/MSS should be 0897/C or later.

To set multiple host groups, the “LUN Manager” license is required.
Check whether the “LUN Manager” license (refer to Table 2.1-1) is set to “enabled” by referring to “HSNM2 User’s Guide”.
To create LUs using DP pool, the “Dynamic Provisioning” license is required.
Check whether the “Dynamic Provisioning” license (refer to Table 2.1-1) is set to “enabled” by referring to “HSNM2 User’s Guide”.

Table 2.1-1 Setting and Confirming Items of Priced Option

No.	Item	Details on setting/confirmation
1	LUN Manager	Set “enabled”.
2	Dynamic Provisioning	Set “enabled”.

(a-1) If “LUN Manager” is not displayed
Unlock the “LUN Manager” license by referring to “HSNM2 User’s Guide”.

(a-2) If the license is set to “disabled”
Set the “LUN Manager” license to “enabled” by referring to “HSNM2 User’s Guide”.

(a-3) If “Dynamic Provisioning” is not displayed
Unlock the “Dynamic Provisioning” license by referring to “HSNM2 User’s Guide”.

NOTE: “Dynamic Provisioning” license will be unlocked after rebooting AMS.

(a-4) If the license is set to “disabled”
Set the “Dynamic Provisioning” license to “enabled” by referring to “HSNM2 User’s Guide”.

NOTE: “Dynamic Provisioning” license will be enabled after rebooting AMS.

(a-5) If both of the license “LUN Manager” and “Dynamic Provisioning” is set to “enabled”, or if you have set “enabled” to both of the license “LUN Manager ” and “Dynamic Provisioning ”at step (a)-(d), proceed to Disk Setting “2.2 Setting and Confirming LUs used in Hitachi Data Ingestor” (DSKST 02-0030).

Copyright © 2012, 2014, Hitachi, Ltd.

(6-2) LU creation not using DP pool

To set multiple host groups, the “LUN Manager” license is required.
Check whether the “LUN Manager” license (refer to Table 2.1-1) is set to “enabled” by referring to “HSNM2 User’s Guide”.

Table 2.1-2 Setting and Confirming Items of Priced Option

No.	Item	Details on setting/confirmation
1	LUN Manager	Set “enabled”.

(b-1) If “LUN Manager” is not displayed
Unlock the “LUN Manager” license by referring to “HSNM2 User’s Guide”.

(b-2) If the license is set to “disabled”
Set the “LUN Manager” license to “enabled” by referring to “HSNM2 User’s Guide”.

(b-3) If “LUN Manager” is set to “enabled”, or if you have set “enabled” to “LUN Manager ” at step (a)-(b), proceed Disk Setting “2.2 Setting and Confirming LUs used in Hitachi Data Ingestor” (DSKST 02-0030).

Copyright © 2010, 2012, Hitachi, Ltd.

2.2 Setting and Confirming LUs used in Hitachi Data Ingestor

Create an LU used in Hitachi Data Ingestor.
If the LU is already created, proceed to “(4) Checking LU”.

NOTE: If you create LUs using DP pool, regard “RAID group” as “DP pool” in this section when you perform this section procedure.

(1) Checking the RAID group settings

(1-1) In the single node configuration using a disk array subsystem

NOTE: In the single node configuration using a disk array subsystem, DP pools or RAID groups are used.

Refer to “HSNM2 User’s Guide,” and create one user LU for one DP pool/RAID group as shown in Figure 2.2-1.

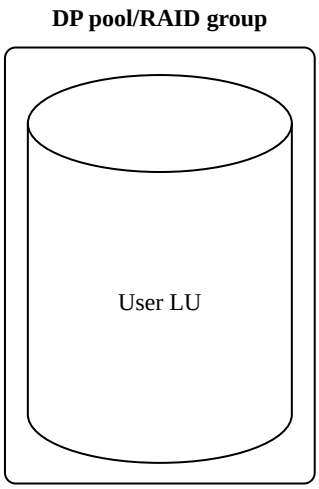

Figure 2.2-1 DP pool/RAID group and User LU in the single node configuration using a disk array subsystem

Copyright © 2010, 2012, Hitachi, Ltd.

(1-2) In the cluster node configuration using a disk array subsystem

For the configuration of HDI for HCP, check that the RAID group settings is made as shown in Table 2.2-1 by referring to “HSNM2 User’s Guide”.
For the configuration of HDI for Cloud, set the RAID group by the setting as shown in Table 2.2-1-1.

NOTE: For Hitachi Content Platform (hereinafter referred to as HCP) linkage configuration, creation of the RAID group is not necessary because the one already created for HCP is used.

Table 2.2-1 Check Items of RAID Group in the Configuration of HDI for HCP

#	Item		Details of checking
1	RAID group (*)		Check that the RAID groups #0 through #3 are created.
2	RAID level		Check that the RAID level is set to RAID6.
3	Drive configuration	Drive type	Check that the SATA, SAS, SAS7.2K or SSD drive is used. When using the HUS100 series, make sure that the drive of SAS, SAS 7.2K, or SSD is used.
4		Combination	Select the combination which is suitable for RAID level and the use.
5		Number of parity groups	Check that “Number of parity group” is “1” (fixed).

*: For the RAID group configuration, refer to Figure 2.2-2.

Table 2.2-1-1 RAID Group Setting Items of Storage on Edge Side in the Configuration of HDI for Cloud

#	Item		Setting Content
1	RAID group (*)		Create two RAID group. At this step, an example where the RAID group #000 and the RAID group #001 are used is shown.
2	RAID level		The RAID group to which the cluster management LU is assigned must be created at the RAID level RAID6. The RAID group to which only user LUs are assigned must be created at the RAID level RAID1, 5, or 6.
3	Drive configuration	Drive type	Use an SATA, an SAS, SAS7.2K or an SSD drive. When using the HUS100 series, use the drive of SAS, SAS 7.2K, or SSD.
4		Combination	Select the combination which is suitable for RAID level and the use.
5		Number of parity groups	Crate one fixed parity group.

*: For the RAID group configuration, refer to Figure 2.2-2-1.

Copyright © 2012, 2016, Hitachi, Ltd.

Figure 2.2-2 shows the RAID group configuration used in the configuration of HDI for HCP.

NOTE:
- The LUs for HCP enclosed by the dashed line are already created in the RAID group.
- For the configuration of HDI for HCP, do not assign User LU to the RAID Group to which the cluster management LU was assigned.

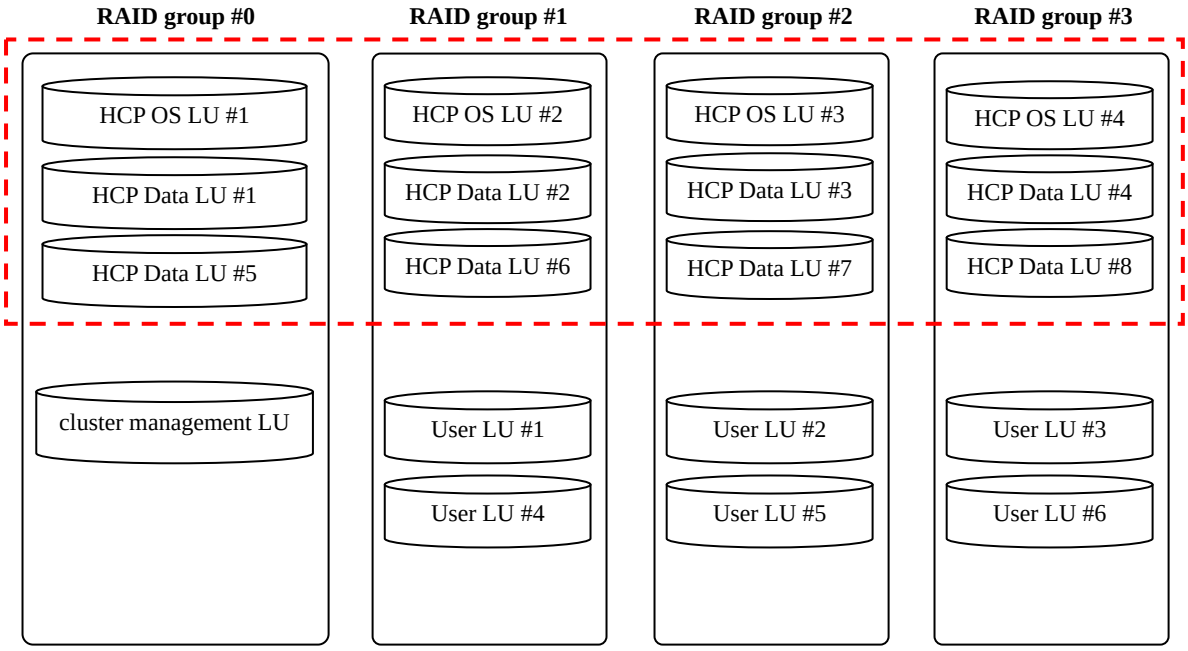

Figure 2.2-2 RAID Group Configuration in the Configuration of HDI for HCP

Copyright © 2011, 2016, Hitachi, Ltd.

Figure 2.2-2-1 shows the RAID group configuration to be used on the configuration of HDI for Cloud.

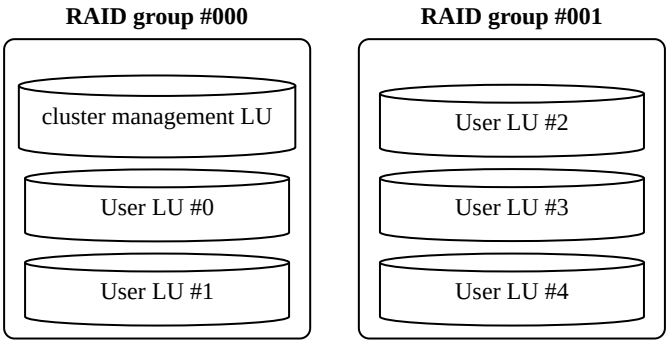

Figure 2.2-2-1 RAID Group Configuration in the Configuration of HDI for Cloud

Copyright © 2010, 2016, Hitachi, Ltd.

(2) Creating a logical unit (LU)

(2-1) In the single node configuration using a disk array subsystem
Set the contents in Tables 2.2-2 and 2.2-3 with reference to “HSNM2 User’s Guide.”

Table 2.2-2 LU Setting/ Confirmation Item

#	Item	Setting/ Confirming contents
1	Logical Unit number	Set the Logical Unit number.
2	Capacity	Set the capacity of LU to be created. (See “capacity” in Table 2.2-3.)

Table 2.2-3 LU that corresponds to Hitachi Data Ingestor

#	LU	RAID group number	LUN	capacity
1	User LU	Arbitrary	Arbitrary	• For the DP pool, 128TB (The OS version is 4.0.0-XX or later) • Other than DP pool: Arbitrary (full capacity of the RAID group is recommended)

Copyright © 2010, 2016, Hitachi, Ltd.

(2-2) In the cluster node configuration using a disk array subsystem
Perform the settings following Tables 2.2-4 and 2.2-5 by referring to “HSNM2 User’s Guide”.

Table 2.2-4 Setting/Checking Items for LUs

#	Item	Details
1	Logical unit number	Set the logical unit number.
2	Capacity	Set the capacity of an LU to be created. (Refer to the “capacity” column of Table 2.2-5.)

Table 2.2-5 LU for Hitachi Data Ingestor

#	LU (*1)	capacity
1	cluster management LU (*3,*4)	70GB (fixed)
2	User LU	130MB (or more) (*2)

*1: For recommendation of the LU assignment to the RAID group, refer to the RAID group configuration shown in Figure 2.2-2 for the configuration of HDI for HCP, Figure 2.2-2-1 for the configuration of HDI for Cloud.
*2: If LVM is not used, it should be 128MB (or more).
*3: Be sure to map the cluster management LU to HLUN0.
*4 If no RAID group other than the DP pool exists in the AMS2000 Series (version: 0897/C or later), the MSS (version: 0897/C or later), or the HUS100 series, the cluster management LU can be created using the DP pool by complying with the following restrictions.

(a) Restrictions in the configuration without using Shadow Image/True Copy in the AMS2000 series, the MSS, or the HUS100 series
- Do not create a command device or, even if creating one, do not map it to the port to which Hitachi Data Ingestor is connected.
- Use the full-capacity option when creating a cluster management LU.

(b) The configuration using Shadow Image/True Copy in the AMS2000 series, the MSS, or the HUS100 series.
- Configure at least one DP pool by RAID6 and create a cluster management LU using this DP pool.
- Use the full-capacity option when creating a cluster management LU.

(3) Formatting the logical unit
Format the created logical unit so that it can be used.
Execute the formatting and confirm the completion by referring to “HSNM2 User’s Guide”.

(4) Checking the LU
Check the LU created on the disk array subsystem.
Check whether the LU meets the conditions indicated in Tables 2.2-1, Table 2.2-1-1 and Table 2.2-5 with reference to “HSNM2 User’s Guide”.

Copyright © 2012, Hitachi, Ltd.

(5) Mapping the LU
Map the LU created on the disk array subsystem to the FC port.

(5-1) In the single node configuration using a disk array subsystem
It is recommended to map the user LU to HLUN0.

(5-2) In the cluster node configuration using a disk array subsystem
Observe the following in mapping.

- Be sure to map the cluster management LU to HLUN0.
- Be sure to map the same LU to the same HLUN of each port.

After completing the mapping, refer to “HSNM2 User’s Guide”, and set the mapping guard of the cluster management LU to “Enabled”.

As an example, Table 2.2-6 shows a setting example for the configuration of HDI for HCP in Figure 2.2-3. In addition, Table 2.2-7 shows a setting example for the configuration of HDI for Cloud in Figure 2.2-4.

Copyright © 2011, 2012, Hitachi, Ltd.

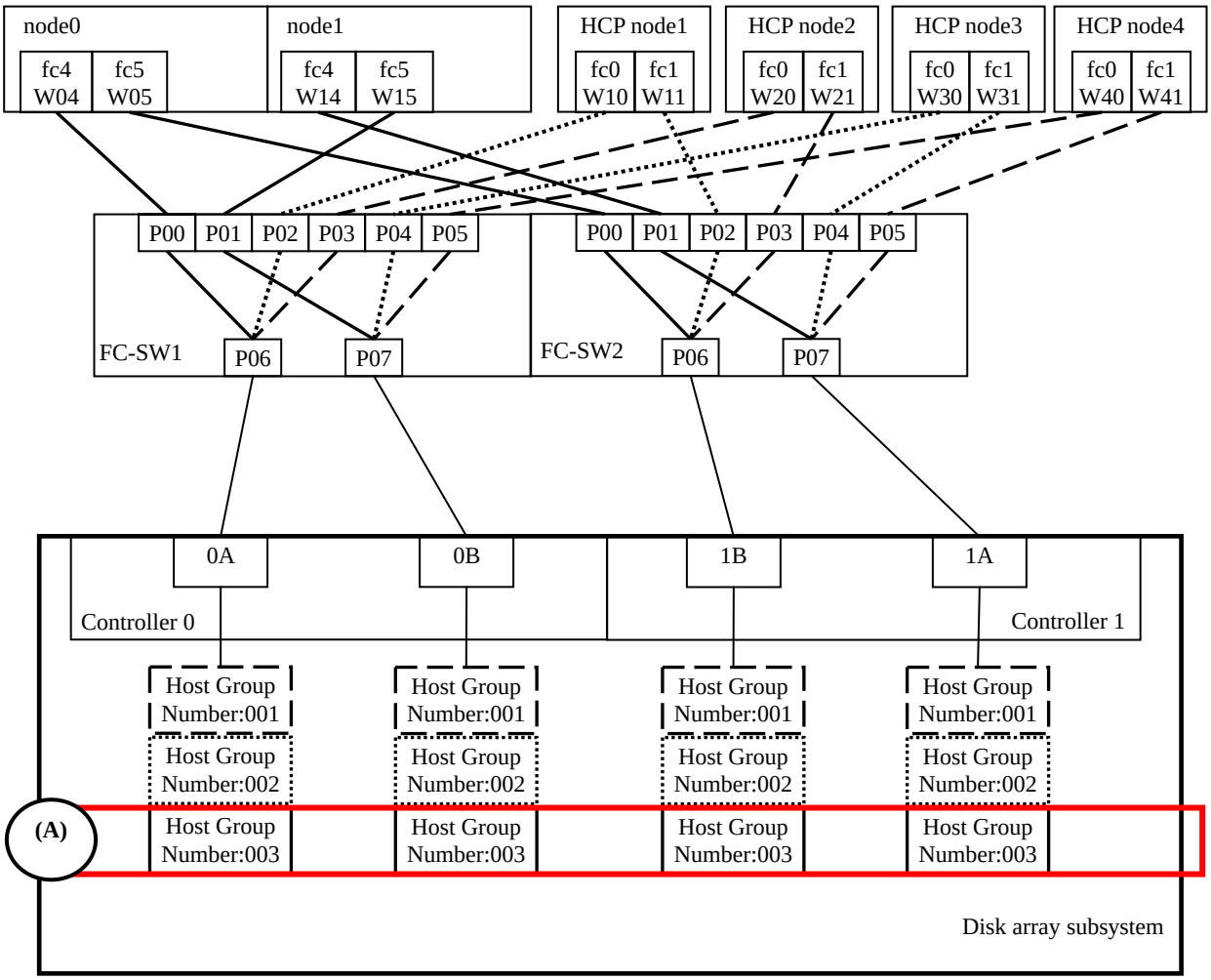

Figure 2.2-3 Example of the Configuration of HDI for HCP

The Host Group of (A) (Host Group number 003) should be the host group that maps the LU of Hitachi Data Ingestor.
For the host group used in Hitachi Data Ingestor, use a host group number which is not used for HCP.

NOTE:
- The FC-SW zoning is necessary.
  Request the system administrator to execute the WWN zoning.
  Note that the group zoning cannot be used.
- Under the Host Group used for HCP, do not map the LU (cluster management LU, User LU) used in Hitachi Data Ingestor.

Copyright © 2010, 2012, Hitachi, Ltd.

Table 2.2-6 shows a setting example on the storage side of an example of the configuration of HDI for HCP.

Table 2.2-6 Setting Example on Storage Side of Example of the Configuration of HDI for HCP

HLUN	Port 0A			Port 0B			Port 1A			Port 1B		
	HG#001	HG#002	HG#003	HG#001	HG#002	HG#003	HG#001	HG#002	HG#003	HG#001	HG#002	HG#003
	WWN: W10	WWN: W20	WWN: W04	WWN: W30	WWN: W40	WWN: W15	WWN: W31	WWN: W41	WWN: W14	WWN: W11	WWN: W21	WWN: W05
0	HCP OS LU #1	HCP OS LU #2	cluster management LU	HCP OS LU #3	HCP OS LU #4	cluster management LU	HCP OS LU #3	HCP OS LU #4	cluster management LU	HCP OS LU #1	HCP OS LU #2	cluster management LU
1	HCP DATA LU #1	HCP DATA LU #2	User LU #1	HCP DATA LU #3	HCP DATA LU #4	User LU #1	HCP DATA LU #3	HCP DATA LU #4	User LU #1	HCP DATA LU #1	HCP DATA LU #2	User LU #1
2	HCP DATA LU #5	HCP DATA LU #6	User LU #2	HCP DATA LU #7	HCP DATA LU #8	User LU #2	HCP DATA LU #7	HCP DATA LU #8	User LU #2	HCP DATA LU #5	HCP DATA LU #6	User LU #2
to	to	to	to	to	to	to	to	to	to	to	to	to
129	HCP DATA LU #2	HCP DATA LU #1	User LU #129	HCP DATA LU #4	HCP DATA LU #3	User LU #129	HCP DATA LU #4	HCP DATA LU #3	User LU #129	HCP DATA LU #2	HCP DATA LU #1	User LU #129
130	HCP DATA LU #6	HCP DATA LU #5	User LU #130	HCP DATA LU #8	HCP DATA LU #7	User LU #130	HCP DATA LU #8	HCP DATA LU #7	User LU #130	HCP DATA LU #6	HCP DATA LU #5	User LU #130
to	to	to	to	to	to	to	to	to	to	to	to	to
254	—	—	User LU #254	—	—	User LU #254	—	—	User LU #254	—	—	User LU #254
255	—	—	User LU #255	—	—	User LU #255	—	—	User LU #255	—	—	User LU #255

NOTE:
- For the OS version 4.2.2-XX and later, refer to Disk Setting "Table 4.3-2 Comparison Tables of Setting Examples on Storage Side 1 (DSKST 04-0210)" and use appropriate values.
- Be sure to map the cluster management LU to HLUN0.
- For the mapping to be used in Hitachi Data Ingestor, be sure to map the same LU to the same HLUN as shown in the sections enclosed by the bold lines in Table 2.2-6.

Copyright © 2010, 2016, Hitachi, Ltd.

Figure 2.2-4 shows an example of the configuration of HDI for Cloud.

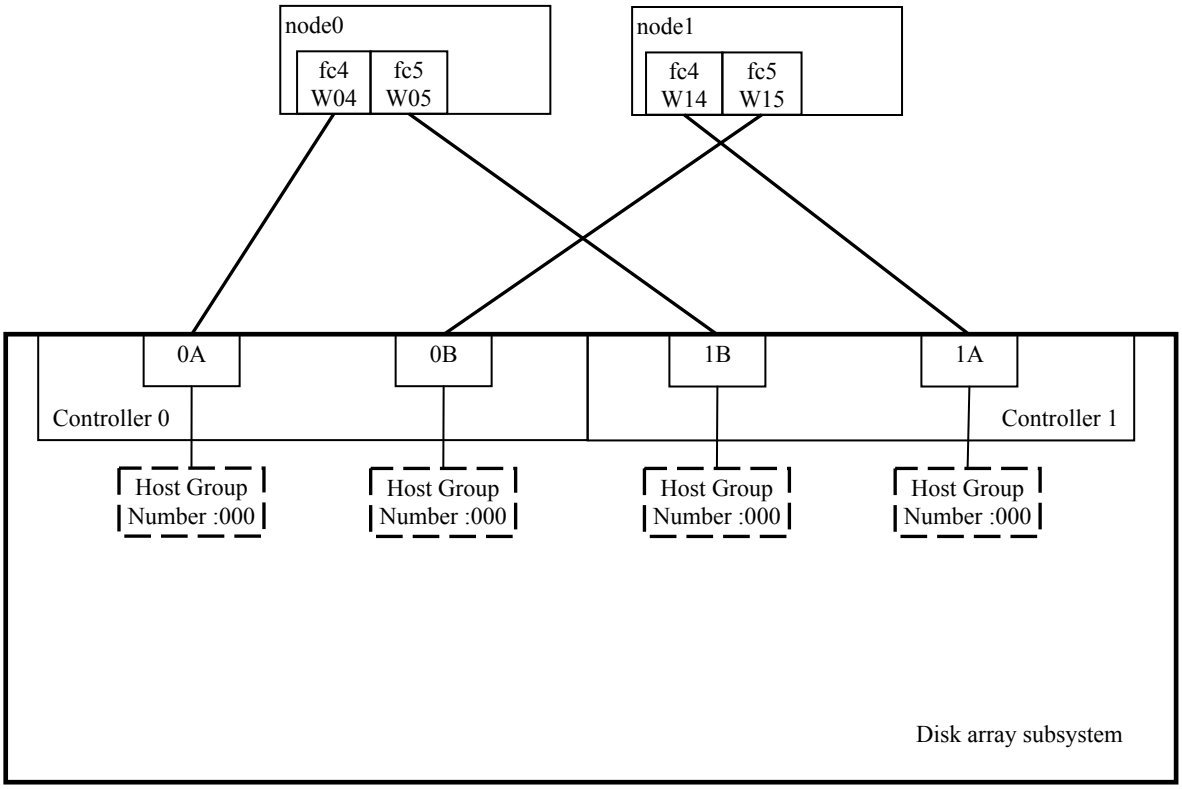

Figure 2.2-4 Example of the Configuration of HDI for Cloud

Table 2.2-7 shows a setting example on the storage side of an example of the configuration of HDI for Cloud.

Table 2.2-7 Setting Example on Storage Side of Example of the Configuration of HDI for Cloud

HLUN	Port 0A	Port 0B	Port 1A	Port 1B
	HG#000	HG#000	HG#000	HG#000
	WWN:W04	WWN:W15	WWN:W14	WWN:W05
0	cluster management LU	cluster management LU	cluster management LU	cluster management LU
1	User LU #1	User LU #1	User LU #1	User LU #1
2	User LU #2	User LU #2	User LU #2	User LU #2
to	to	to	to	to
254	User LU #254	User LU #254	User LU #254	User LU #254
255	User LU #255	User LU #255	User LU #255	User LU #255

NOTE:
- For the OS version 4.2.2-XX and later, refer to Disk Setting "Table 4.3-3 Comparison Tables of Setting Examples on Storage Side 2 (DSKST 04-0230)" and use appropriate values.
- Be sure to map the cluster management LU to HLUN0.
- Be sure to map the same LU to the same HLUN.

Copyright © 2010, 2016, Hitachi, Ltd.

2.3 Acquiring WWNs of Nodes

For acquiring WWN of the node, refer to "B.5.1 Acquiring WWNs of Nodes."

Copyright © 2010, 2012, Hitachi, Ltd.

This page is for editorial purpose only.

Copyright © 2010, 2012, Hitachi, Ltd.

2.4 Setting and Confirming System Parameters

Perform the settings and confirmation of the system parameters.

(1) Setting and confirming boot options
Set boot options.
Check that the “dual active mode” is set for the “system start attribute” (refer to Table 2.4-1) by referring to “HSNM2 User’s Guide”.
When connecting Hitachi Data Ingestor, the “single mode” is not supported.

Table 2.4-1 Setting and confirming Boot Options

No.	Item		Details on setting/confirmation
1	Boot Option	System start attribute	Set “dual active mode”.

(a) If the “dual active mode” is not set
Set the dual active mode by referring to “HSNM2 User’s Guide”.
After setting is completed, reboot the disk array subsystem.

① Request the system administrator to stop the access to Hitachi Data Ingestor from all the clients so that there is no I/O operation.

② Set the “main switch” on the front of the disk array subsystem to off.
For details, in the case the subject of disk array subsystem is the AMS2000 series, refer to “DF800 Disk Array System Maintenance Manual ‘Installation’”. In the case it is the MSS, refer to “DF800E-XS Disk Array System Maintenance Manual ‘Installation’”, and in the case it is the HUS100 series, refer to “DF850 Disk Array System Maintenance Manual ‘Installation’”.

③ Check that the Power LED is turned off.
For the location of Power LED, in the case the subject of disk array subsystem is the AMS2000 series, refer to “DF800 Disk Array System Maintenance Manual ‘Installation’”. In the case it is the MSS, refer to “DF800E-XS Disk Array System Maintenance Manual ‘Installation’”, and in the case it is the HUS100 series, refer to “DF850 Disk Array System Maintenance Manual ‘Installation’”.

④ After checking that the Power LED is turned off, turn on the main switch on the disk array subsystem and check that the Power LED and the Ready LED lights up.
For details, in the case the subject of disk array subsystem is the AMS2000 series, refer to “DF800 Disk Array System Maintenance Manual ‘Installation’”. In the case it is the MSS, refer to “DF800E-XS Disk Array System Maintenance Manual ‘Installation’”, and in the case it is the HUS100 series, refer to “DF850 Disk Array System Maintenance Manual ‘Installation’”.

(b) If the dual active mode is already set or it has been set in (a)
Proceed to step (2).

Copyright © 2010, 2012, Hitachi, Ltd.

This page is for editorial purpose only.

Copyright © 2010, 2011, Hitachi, Ltd.

(2) Setting and confirming fibre channel information
Set the fibre channel information.
Check that the settings shown in Table 2.4-2 are performed by referring to “DF800 Disk Array System Maintenance Manual System Parameter” in the case of the AMS2000 series, to “DF800E-XS Disk Array System Maintenance Manual System Parameter” in the case of the MSS, to “DF850 Disk Array System Maintenance Manual System Parameter” in the case of the HUS100 series.

NOTE: When you perform the fibre channel settings, take a note of the name of each displayed port (0A, 0B, etc. and WWN).

Table 2.4-2 Setting and Confirming Items of Fibre Channel Port

N0.	Item			Details on setting/confirmation	Target
1	Fibre Channel	Port address	New set value	Enter a 6-digit number (in hexadecimal).(*1)	Each FC port of AMS2000 Series, MSS, and HUS100 series
2		Transfer rate		For the direct connection, set “8Gbps”. If the model name is DF800-RKS, set “4Gbps”. When connecting the fibre channel switch, set “1Gbps, 2Gbps, 4Gbps, 8Gbps, or Auto Negotiation” according to the transfer rate of the fibre channel switch. If the model name is DF800-RKS, or DF800-RKEXS set “1Gbps, 2Gbps, 4Gbps, or Auto Negotiation.” If it is the HUS100 series, set “2Gbps, 4Gbps, 8Gbps, or Auto Negotiation.”	
3		Topology		For the direct connection, set “Loop”. When connecting the fibre channel switch, set “Point-to-point”	

*1: If there is no necessity of change, set the displayed default value.

(a) If the setting and confirmation are not performed
Perform the settings and confirmation by referring to “DF800 Disk Array System Maintenance Manual System Parameter” in the case of the AMS2000 series, to “DF800E-XS Disk Array System Maintenance Manual System Parameter” in the case of the MSS, to “DF850 Disk Array System Maintenance Manual System Parameter” in the case of the HUS100 series.

(b) If the setting and confirmation are already made or have been performed in (a)
Proceed to Disk Setting “2.5 Setting and Confirming the LUN Manager” (DSKST 02-0140).

Copyright © 2010, 2012, Hitachi, Ltd.

2.5 Setting and Confirming the LUN Manager

Perform the settings and confirmation of the LU mapping.

(1) Setting the mapping mode
The mapping mode needs to be enabled.
Check whether the “mapping mode” in Table 2.5-1 is set to “enabled” or not by referring to “HSNM2 User’s Guide”.

Table 2.5-1 Setting and Confirming Items for Mapping Mode

No.	Item	Details on setting/confirmation
1	Mapping mode	Set it to “enabled”.

(a) If “disabled” is set
Set the mapping mode to “enabled” by referring to “HSNM2 User’s Guide”.

(b) If “enabled” is already set or the mode has been set to “enabled” in (a)
Proceed to step (2).

(2) Setting the Host group security mode

NOTE: For the configuration of HDI for Cloud, the security mode of the host group does not have to be necessarily enabled, and the host group security mode may be disabled.

When the target configuration is other than the configuration of HDI for Cloud, the host group security mode needs to be enabled.
Check whether the “host group security mode” in Table 2.5-2 is set to “enabled” or not by referring to “LUN Manager User’s Guide”.

Table 2.5-2 Setting/Confirming Items for Host Group Security Mode

No.	Item	Details on setting/confirmation	Setting Target
1	Host group security mode	Set the mode to “enabled”.	Each FC port of AMS2000 Series, MSS, and HUS100 series

(a) If “disabled” is set
Set the “host group security mode” to “enabled” by referring to “LUN Manager User’s Guide”.

(b) If “enabled” is already set or the mode has been set in (a)
Proceed to step (3).

Copyright © 2010, 2012, Hitachi, Ltd.

(3) Setting the host group
Set the host group.
Check whether the item of Table 2.5-3 No.1 is set to meet Disk Setting "Chapter 4 Disk Array Subsystem Connection Specifications for Each Model" (DSKST 04-0000) by referring to "LUN Manager User's Guide".

Table 2.5-3 Setting and Confirming Items of Host Group

No.	Item	Details on setting/confirmation	Setting Target
1	Number	Set the host group number.	Each FC port of AMS2000 Series, MSS, and HUS100 series
2	Name	Set the host group name. Enter any single-byte alphanumeric characters within 16 digits.	

(a) If not set
Set the items of Table 2.5-3 to meet Disk Setting "Chapter 4 Disk Array Subsystem Connection Specifications for Each Model" (DSKST 04-0000) by referring to "LUN Manager User's Guide".

(b) If set or set in (a)
Proceed to step (4).

(4) Setting host group options
Set the host group options.
Check whether the settings shown in Table 2.5-4 are performed or not by referring to "DF800 Disk Array System Maintenance Manual System Parameter" in the case of the AMS2000 series, to "DF800E-XS Disk Array System Maintenance Manual System Parameter" in the case of the MSS, to "DF850 Disk Array System Maintenance Manual System Parameter" in the case of the HUS100 series.

Table 2.5-4 Setting and Confirming Items for Host Group Options

No.	Item	Details on setting/confirmation	Setting Target
1	Platform	Set "Linux".	Each host group
2	Standard setting	Set "standard mode".	
3	Detailed setting	Set "no check" for all. However, check "Enable DP Depletion Detail Reply Mode:" when using DP pool.	

(a) If it is not set
Perform settings following Table 2.5-4 by referring to "DF800 Disk Array System Maintenance Manual System Parameter" in the case of the AMS2000 series, to "DF800E-XS Disk Array System Maintenance Manual System Parameter" in the case of the MSS, to "DF850 Disk Array System Maintenance Manual System Parameter" in the case of the HUS100 series.

(b) If it is already set or it has been set in (a)
Proceed to step (5).

Copyright © 2010, 2012, Hitachi, Ltd.

(5) Setting mapping information
Set the mapping information.
Check whether the mapping is set to meet the setting example described in Disk Setting "Chapter 4 Disk Array Subsystem Connection Specifications for Each Model" (DSKST 04-0000) or not by referring to "HSNM2 User's Guide".

(a) If the mapping information is not set to meet the setting example
Perform settings to meet Disk Setting "Chapter 4 Disk Array Subsystem Connection Specifications for Each Model" (DSKST 04-0000) by referring to "HSNM2 User's Guide".

NOTE:
- If the mapping guard of the mapping target LU is "enabled", the mapping information cannot be set. Therefore, check that the mapping guard of the mapping target LU is set to "disabled" by referring to "HSNM2 User's Guide."
  If the mapping guard is set to "enabled", set it to "disabled" by referring to "HSNM2 User's Guide."
- For the WWN assignment acquired in Section 2.3, in case of the configuration of HDI for HCP, perform settings so that items ①, ②, ③, and ④ are properly assigned by referring to "Table 2.5-5 Setting Example on Storage Side of the Configuration of HDI for HCP", "Figure 2.5-1 Emulex Utility Port Window of node0 (example)", "Figure 2.5-2 Emulex Utility Port Window of node1 (example)", and "Table 2.5-6 Worksheet for Memo of WWN".
  In case of the configuration of HDI for Cloud and the setting of the host group security mode is enabled, perform settings so that items ①, ②, ③, and ④ are properly assigned by referring to "Table 2.5-5 Setting Example on Storage Side of the Configuration of HDI for Cloud Example", "Figure 2.5-1 Emulex Utility Port Window of node0 (example)", "Figure 2.5-2 Emulex Utility Port Window of node1 (example)", and "Table 2.5-6 Worksheet for Memo of WWN."
  The WWN assignment is not necessary in case of the configuration of HDI for Cloud and the setting of the host group security mode is disabled.

Table 2.5-5 Setting Example on Storage Side of the Configuration of HDI for HCP

HLUN	Port 0A ①			Port 0B ④			Port 1A ③			Port 1B ②		
	HG#001	HG#002	HG#003	HG#001	HG#002	HG#003	HG#001	HG#002	HG#003	HG#001	HG#002	HG#003
	WWN: W10	WWN: W20	WWN: W04	WWN: W30	WWN: W40	WWN: W15	WWN: W31	WWN: W41	WWN: W14	WWN: W11	WWN: W21	WWN: W05
0	HCP OS LU #1	HCP OS LU #2	cluster management LU	HCP OS LU #3	HCP OS LU #4	cluster management LU	HCP OS LU #3	HCP OS LU #4	cluster management LU	HCP OS LU #1	HCP OS LU #2	cluster management LU

Table 2.5-5-1 Setting Example on Storage Side of the Configuration of HDI for Cloud

HLUN	Port 0A ①	Port 0B ④	Port 1A ③	Port 1B ②
	HG#000	HG#000	HG#000	HG#000
	WWN:W04	WWN:W15	WWN:W14	WWN:W05
0	cluster management LU	cluster management LU	cluster management LU	cluster management LU

Copyright © 2010, 2012, Hitachi, Ltd.

```
Emulex Light Pulse BIOS Utility, ZB2.01a2
Copyright (c) 1997-2007 Emulex. All rights reserved.

Emulex Adapters in the System:

1.  LPe11002- M4:     PCI Bus, Device, Function (02, 00, 00)  ①
2.  LPe11002- M4:     PCI Bus, Device, Function (02, 00, 01)  ②



Enter a Selection:

Enter <x> to Exit
```

Figure 2.5-1 Node0 Emulex Utility Port window (example)

```
Emulex Light Pulse BIOS Utility, ZB2.01a2
Copyright (c) 1997-2007 Emulex. All rights reserved.

Emulex Adapters in the System:

1.  LPe11002- M4:     PCI Bus, Device, Function (02, 00, 00)  ③
2.  LPe11002- M4:     PCI Bus, Device, Function (02, 00, 01)  ④



Enter a Selection:

Enter <x> to Exit
```

Figure 2.5-2 Node1 Emulex Utility Port window (example)

Table 2.5-6 Worksheet for Memo of WWN

	PCI Bus, Device, Function (02, 00, 00)	PCI Bus, Device, Function (02, 00, 01)
node0	①	②
node1	③	④

(b) When the mapping information is set as the setting example or set at step (a), proceed to step (6).

Copyright © 2010, Hitachi, Ltd.

(6) Setting mapping guard
The mapping guard needs to be “Enabled” for the mapped system LU.
Refer to “HSNM2 User’s Guide”, and check that “Mapping Guard” in Table 2.5-7 is set to “Enabled”.

Table 2.5-7 Setting/Confirmation Items of Mapping Guard

No.	Item	Details on setting/confirmation	Setting Target
1	Mapping Guard	Set “Enabled”.	cluster management LU

(a) In case of “Disabled”
Refer to “HSNM2 User’s Guide”, and set “Mapping Guard” to “Enabled”.

(b) When it is already “Enabled” or set to “Enabled” at step (a), the disk setting is completed.

NOTE: It is not required to enable the mapping guard for the user LU.

Copyright © 2010, 2012, Hitachi, Ltd.

Copyright © 2014, Hitachi, Ltd.

Chapter 3 Disk Setting for USP V, USP VM, VSP, VSP G1000, VSP Gx00/VSP Fx00, and HUS VM

3.1 Setting and Confirming the Disk Array Subsystem
3.2 Setting and Confirming LUs used in Hitachi Data Ingestor
3.3 Acquiring WWNs of Nodes
3.4 Setting and Confirming System Parameters
3.5 Setting and Confirming the LUN Manager

- In the case of setting a Hitachi Data Ingestor at the local site, Section 3.2 to 3.4 might be executed by the side of customer. In this case, after registering in SVP and Maintenance PC, replace the description of “set (or setting)” with “confirmation” in the section 3.2 to 3.4, and then confirm the settings with SVP and Maintenance PC.

- In the case of setting a Hitachi Data Ingestor at the factory site, the tool can be used.
  Set the setting contents in the procedure of section 3.2 to 3.4 by using the tool.
  After registering in SVP and Maintenance PC, replace the description of “set (or setting)” with “confirmation” in the section 3.2 to 3.4, and then confirm the settings with SVP and Maintenance PC.

- In the case of using USP V, USP VM, VSP, VSP G1000, VSP Gx00/VSP Fx00, or HUS VM as a disk array subsystem of Hitachi Data Ingestor and creating multiple host groups for the one FC port in the disk array subsystem, the installation of option products: “LUN Manager” and “Open Volume Management” are required. For using the Dynamic Provisioning pool, “Dynamic Provisioning” is required and, for using the Dynamic Provisioning pool by enabling Dynamic Tiering by using VSP or VSP G1000, VSP Gx00, “Dynamic Tiering” must be installed.

Copyright © 2010, 2016, Hitachi, Ltd.

3.1 Setting and Confirming the Disk Array Subsystem

When the disk array subsystem to be connected to Hitachi Data Ingestor is USP V or USP VM, prepare “Storage Navigator User’s Guide”, and “LUN Manager User’s Guide”, and “LUN Expansion (LUSE) User’s Guide”.
When the disk array subsystem to be connected to Hitachi Data Ingestor is VSP, prepare “Hitachi Storage Navigator User Guide” and “Provisioning Guide for Open Systems” , and “Maintenance Manual” for the disk array subsystem.
When the disk array subsystem to be connected to Hitachi Data Ingestor is VSP G1000, prepare “Mainframe System Administrator Guide” and “Provisioning Guide for Open Systems” , and “Maintenance Manual” for the disk array subsystem.
In case of VSP Gx00/VSP Fx00, use “System Administrator Guide”, “Provisioning Guide” and “Maintenance Manual” for the disk array subsystem.
When the disk array subsystem to be connected to Hitachi Data Ingestor is HUS VM, prepare “Storage Navigator User’s Guide”, “Provisioning Guide”, and “Maintenance Manual” for the disk array subsystem.
When you see “Mainframe System Administrator Guide” in this document, replace it to “Storage Navigator User’s Guide” for USP V or USP VM, and to “Hitachi Storage Navigator User Guide” for VSP or HUS VM, to “System Administrator Guide” for VSP Gx00/VSP Fx00 respectively.

To set and confirm the disk array subsystem, use SVP for USP/USP VM/VSP/VSP G1000/HUS VM and use the maintenance PC for VSP Gx00.

(1) Permission for SVP usage
To use the SVP, a license for the SVP of the disk array and the CONSOLE PC to be operated is required.
Contact to the system administrator, and get a permission to use the SVP and the CONSOLE PC.

(2) Executing the connection utilities
To use the SVP, start up the connection utilities.
Refer to the SVP section described in the maintenance manual of the disk array subsystem, and then start up the connection utilities.

(3) Register in SVP and Maintenance PC
See the SVP section described in the “Maintenance manual” of the disk array subsystem or the section for the MAINTENANCE PC, and confirm that the disk array subsystem to be operated by SVP and Maintenance PC is registered.

Copyright © 2010, 2016, Hitachi, Ltd.

(4) Setting and confirming of paid option

If you create LDEVs using Dynamic Provisioning pool (Here in after referred to as “DP pool”), perform (a). Other than that, perform (b).

(a) LDEV Creation using DP pool

NOTE: To use Dynamic Provisioning, DKCMAIN program of the disk array subsystem should be as follows.
“60-07-5X/XX and later” for USP V, USP VM (XX: Don’t care)
“70-01-2X-XX/XX and later” for VSP, VSP G1000 (XX: Don’t care)
“73-01-0X-XX/XX and later” for HUS VM (XX: Don’t care)

To set the multiple host groups, the license of LUN Manager is required.
And changing the capacity of LDEV requires the license of “Open Volume Management”.
Refer to “Mainframe System Administrator Guide” for USP V, USP VM, VSP, VSP G1000, VSP Gx00/VSP Fx00 or HUS VM, and refer to “Hitachi Storage Navigator User Guide” for VSP and HUS VM, and confirm that the license of LUN Manager and Open Volume Management described in Table 3.1-1 is enabled. If you do not use LUN Manager, confirm only the license of Open Volume Management is enabled.
To create LDEVs using DP pool, the “Dynamic Provisioning” license is required.
Check whether the “Dynamic Provisioning” license (refer to Table 3.1-1) is set to “enabled” by referring to “Mainframe System Administrator Guide” for USP V, USP VM, VSP, VSP G1000, VSP Gx00/VSP Fx00 or HUS VM.
In addition, for using the DP pool by enabling the Dynamic Tiering, the license of “Dynamic Tiering” is also required. Refer to “Mainframe System Administrator Guide”, and confirm whether the license of “Dynamic Tiering” in Table 3.1-1 is set to “valid”.

Copyright © 2015, 2016, Hitachi, Ltd.

Table 3.1-1 Setting and Confirming Items of Priced Option

#	Item	Details on setting/confirmation
1	LUN Manager	Set “enabled”.
2	Open Volume Management	Set “enabled”.
3	Dynamic Provisioning	Set “enabled”.
4	Dynamic Tiering	Set “enabled”.

(i) When there is no display of “LUN Manager” and “Open Volume Management”
Install the program product by referring to the “Mainframe System Administrator Guide” for USP V, USP VM, VSP, VSP G1000, VSP Gx00/VSP Fx00 or HUS VM.

(ii) When they are displayed as “Disabled”
Set to “Enabled” by referring to the “Mainframe System Administrator Guide” for USP V, USP VM, VSP, VSP G1000, VSP Gx00/VSP Fx00 or HUS VM.

(iii) When there is no display of “Dynamic Provisioning”
Install the program product by referring to the “Mainframe System Administrator Guide” for USP V, USP VM, “Provisioning Guide for Open Systems” for VSP or VSP G1000, “Provisioning Guide” for HUS VM, VSP Gx00/VSP Fx00.

(iv) When “Dynamic Provisioning” is displayed as “Disabled”
Set to “Enabled” by referring to the “Mainframe System Administrator Guide” for USP V and USP VM, “Provisioning Guide for Open Systems” for VSP or VSP G1000, “Provisioning Guide” for HUS VM, VSP Gx00/VSP Fx00.

(v) For using Dynamic Tiering and if “Dynamic Tiering” is not displayed:
Refer to “Mainframe System Administrator Guide” for VSP or for VSP G1000, VSP Gx00, and install a “Dynamic Tiering” program product.

(vi) For using Dynamic Tiering and if “Dynamic Tiering” is not enabled:
Refer to “Mainframe System Administrator Guide” for VSP or for VSP G1000, VSP Gx00, and enable the license of “Dynamic Tiering”.

(vii) If the licenses of “LUN Manager”, “Open Volume Management”, and “Dynamic Provisioning” is set to “enabled”, or if you have set “enabled” to these licenses of “LUN Manager” , “Open Volume Management”, and “Dynamic Provisioning” at step (i)-(vi), proceed to Disk Setting “3.2 Setting and Confirming LUs used in Hitachi Data Ingestor” (DSKST 03-0020).

Copyright © 2010, 2016, Hitachi, Ltd.

(b) LDEV creation not using DP pool

To set the multiple host groups, the license of LUN Manager is required.
And changing the capacity of LDEV requires the license of “Open Volume Management”.
Refer to “Mainframe System Administrator Guide” for USP V, USP VM, VSP, VSP G1000, VSP Gx00/VSP Fx00 or HUS VM. And confirm that the license of LUN Manager and Open Volume Management described in Table 3.1-2 is enabled. If you do not use LUN Manager, confirm only the license of Open Volume Management is enabled.

Table 3.1-2 Setting/ Confirming items of paid option

#	Items	Setting/confirming contents
1	LUN Manager	Set “Enabled”.
2	Open Volume Management	Set “Enabled”.

(i) When there is no display of “LUN Manager” and “Open Volume Management”, install the program product by referring to the “Mainframe System Administrator Guide” for USP V, USP VM, VSP, VSP G1000, VSP Gx00/VSP Fx00 or HUS VM.

(ii) When it is displayed as “Disabled”
Set to “Enabled” by referring to the “Mainframe System Administrator Guide” for USP V, USP VM, VSP, VSP G1000, VSP Gx00/VSP Fx00 or HUS VM.

(iii) When the license of “LUN Manager” and “Open Volume Management” are enabled, or if you set the license of “LUN manager” and “Open Volume Management” to “Enabled”, proceed to Disk Setting “3.2 Setting and Confirming LUs used in Hitachi Data Ingestor” (DSKST 03-0020).

Copyright © 2011, 2016, Hitachi, Ltd.

3.2 Setting and Confirming LUs used in Hitachi Data Ingestor

If DP pool is not used, refer to the Section 3.2.1 and if DP pool is used, refer to the Section 3.2.2 respectively.

3.2.1 Setting and confirming LUs when not using DP pool

Create an LDEV to be used on Hitachi Data Ingestor.
If it is created already, execute only the procedure of (4) confirmation of LU.

The procedures of setting and confirming LUs not using DP pool are shown below.

(1) RAID group creation

(a) In the single node configuration using a disk array subsystem.

Refer to the maintenance manual of the disk array subsystem and create one RAID group. Configure a RAID group in one user LU as shown in Figure 3.2-1-1.

NOTE: If the OS version is 4.0.0-XX or later, multiple LUs can be created.

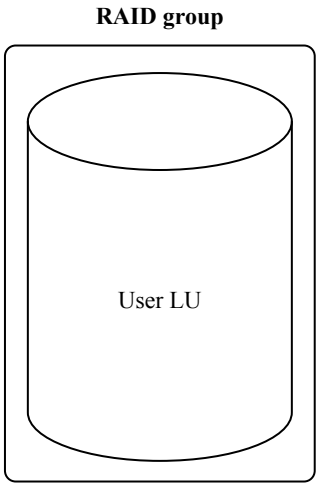

Figure 3.2-1-1 RAID group in the single node configuration using a disk array subsystem

Copyright © 2010, 2016, Hitachi, Ltd.

(b) In the cluster configuration
Here is an example of when using 2 RAID groups.
Refer to the Parity Group screen of the maintenance manual of the disk array subsystem and set the setting contents in Table 3.2.1-1.

Table 3.2.1-1 Setting contents of the RAID group of the Edge storage subsystem in the cluster configuration

#	Item	Setting/confirming contents
1	Number of group(*1)	Create two of RAID group. At this step, an example where the RAID group #000 and the RAID group #001 are used is shown.
2	RAID Level	Create with RAID level “RAID5 or RAID6” of RAID group that allocates cluster management LU. The RAID group to which only user LUs are assigned must be created at one of RAID level “RAID1, RAID5 or RAID6”.
3	Drive Type	For USP V or USP VM, specify “FC”, “SAS”, “SATA” or “SSD”. For VSP, VSP G1000 or HUS VM, specify “SAS”, “SATA” or “SSD”. For VSP Gx00/VSP Fx00, specify “SAS” or “SSD”. (If the installed drive is FMD, display “SSD (FMD)”. And if the installed drive is FMC, display “SSD (FMC)”.)

*1: For the configuration example of the RAID group, refer to Figure 3.2-1-1.

Figure 3.2-1-2 shows the RAID group configuration to be used in the cluster configuration.

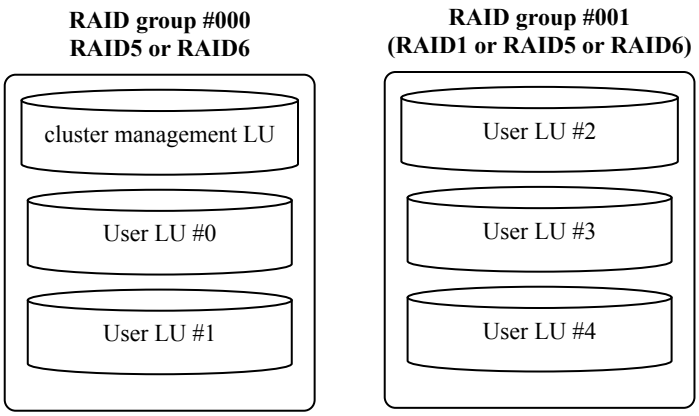

Figure 3.2-1-2 RAID group configuration example in the configuration of HDI for Cloud

Copyright © 2011, 2016, Hitachi, Ltd.

(2) Creating LDEV
For the single node configuration, follow the step (a). For the cluster configuration, follow the step (b).

(a) In the single node configuration using a disk array subsystem

Set the contents in Tables 3.2.1-2 and 3.2.1-3 with reference to the maintenance manual of the disk array subsystem.

Table 3.2.1-2 LU Setting/ Confirmation Item

#	Item	Setting/ Confirming contents
1	Logical Unit number	Set the Logical Unit number. (If the OS version is 4.0.0-XX or later, multiple LUs can be created)
2	Capacity	Set the capacity of LU to be created. (See “capacity” in Table 3.2.1-5.)

Table 3.2.1-3 LU that corresponds to HDI

#	LU	RAID group number	LUN	Capacity
1	User LU	Arbitrary	Arbitrary	Arbitrary (full capacity of the RAID group is recommended)

(b) In the cluster configuration using a disk array subsystem

(i) Set the LDEV
Refer to the maintenance manual of the disk array subsystem, and set the contents in Table 3.2.1-4.

NOTE: Do not create the Cluster management LU using DP pool.

Table 3.2.1-4 LDEV Setting Items

#	Item	Setting/confirming contents
1	Number of LDEVs (*1)	Set the number of LDEVs to be created.
2	Size (*2)	Set the capacity of LDEV to be created. (See “Capacity” in Table 3.2.1-5.)
3	Capacity Unit	Set a unit when specifying a size. The unit of Mbyte or Blocks can be selected.
4	Emulation Type	Set Open-V. (*3)

*1: LDEVs are created to the numbers specified at the Number of LDEVs with the same size for all.
*2: Set more than the value of “Capacity” in Table 3.2.1-5.
*3: Cluster management LU and Command device need to be set as Open series LDEV.

Copyright © 2010, 2016, Hitachi, Ltd.

(ii) LU Capacity setting
Link the created multiple LDEVs to change the capacity of LU if necessary.
If the capacity of each created LDEVs is less than the capacity described in Table 3.2.1-5, those LDEVs must be linked together to be more than that capacity.
Refer to "Storage Navigator User's Guide" for USP V and USP VM, "Provisioning Guide for Open Systems" for VSP and VSP G1000, and "Provisioning Guide" for HUS VM, VSP Gx00/VSP Fx00 to set the LDEVs that have more capacity than the one described in Table 3.2.1-5.

Table 3.2.1-5 Capacity of LU

#	LU Type	LDEV number or LDEV number on the top when multiple LDEVs are linked together (*1)	Capacity
1	Cluster management LU	"XX:XX:00h"	70GB or more
2	Command Device (*2,*3)	"XX:XX:01h"	48MB (or more)
3	User LU	Arbitrary	130MB (or more) (*4)

*1: LDEV number "XX:XX:XXh" is a setting example ("LDKC number: CU number: LDEV number").
*2: Note that the method to create a command device is different with the other method of LDEV creation because the command device cannot be set to the multiply linked LDEVs. (For the details, refer to "Storage Navigator User's Guide" for USP V and USP VM, "Provisioning Guide for Open Systems" for VSP and VSP G1000, and "Provisioning Guide" for HUS VM, VSP Gx00/VSP Fx00.)
*3: Because the command device security is not supported, do not use this when putting a command device attribute in the Hitachi Data Ingestor.
*4: 128MB (or more) if LVM is not used.

(3) LDEV format
Refer to the maintenance manual of the disk array subsystem and make sure that the LDEVs are formatted to the disk array subsystem on the result of process on (1) and (2).

(4) Confirmation of Cluster management LU and command device
Confirm the cluster management LU and the command device created on the disk array subsystem.
Refer to the "Mainframe System Administrator Guide" for USP V, USP VM, VSP, VSP G1000, VSP Gx00/VSP Fx00 or HUS VM, and make sure that the cluster management LU and the command device set to the disk array subsystem are described as Table 3.2.1-4 and Table 3.2.1-5.

(5) LDEV mapping
Map the cluster management LU and command device created on the disk array subsystem to FC port.

(a) In the single node configuration using a disk array subsystem
Recommended to map the user LU to HLUN0.

(b) In the cluster configuration using a disk array subsystem
Please follow the following description when mapping.
Map the LUN0 to the cluster management LU certainly.
Map the same LDEV to the same LUN of each port certainly.

Copyright © 2010, 2016, Hitachi, Ltd.

3.2.2 Setting and confirming LUs when using DP pool

Create an LDEV to be used on Hitachi Data Ingestor. If it is created already, execute only the procedure of (5).

When creating LU using DP pool, create a parity group, LDEV and DP pool after due consideration of the usage purpose and capacity.

NOTE: When creating the node shared LU on DP pool, be sure to fulfill the following a or b.
1. Disk array subsystem is VSP Gx00/VSP Fx00.
2. Disk array subsystem is VSP G1000 and the DKCMAIN version is 08-02-2x or later.

a: Enable the page reservation setting on the above 1 or 2 model.
(In some drive classifications, enabling Accelerated Compression function result in the situation that the disk array subsystem cannot apply this condition.)

b: Fulfill the following conditions.
- When user LU having the same cluster does not exist on the DP pool including the cluster management LU of HDI.
- When user LU having the same cluster does not exist in the parity group including the cluster management LU of HDI.
- User LU of another cluster or server exists on the DP pool including the cluster management LU of HDI though, a user LU has been used and deliberated to prevent a lack of the capacity.
- User LU of another cluster or server exists in the parity group including the cluster management LU of HDI though, a user LU has been used and deliberated to prevent a lack of the capacity.

Image of the relations amongst a parity of the disk array subsystem, LDEV, DP pool and LU is as follows.

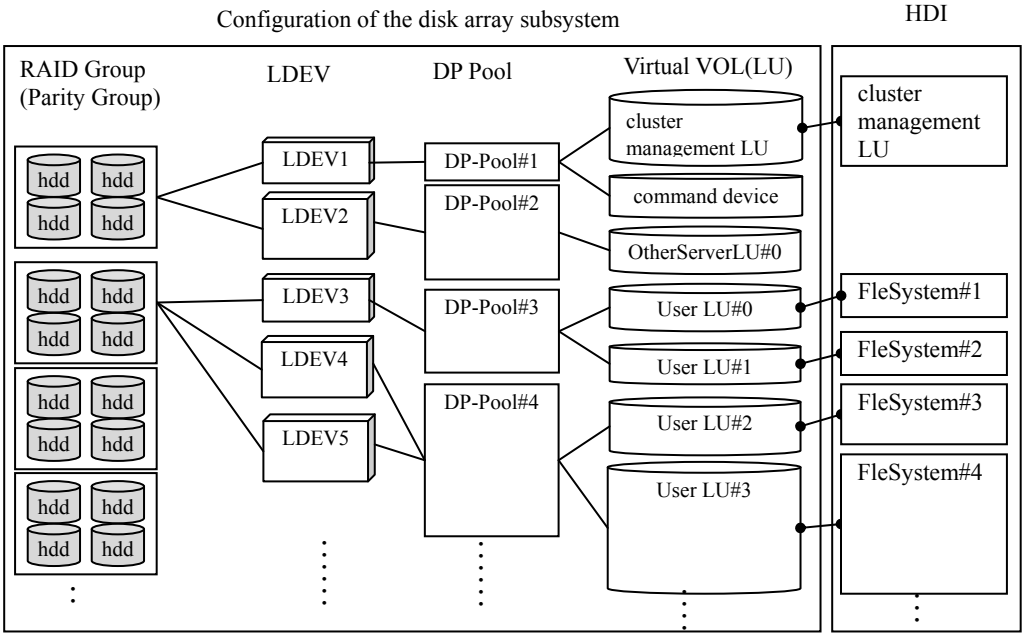

Figure 3.2.2-1 Example of the configuration example when using DP pool (Cluster configuration)

Copyright © 2010, 2017, Hitachi, Ltd.

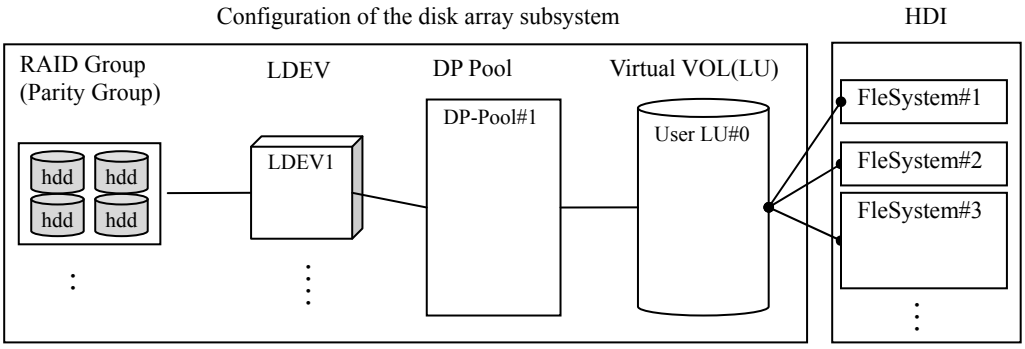

Figure 3.2.2-2 Example of the configuration example when using DP pool (Single node configuration)

(1) Defining Parity Group
When creating the cluster management LU on the DP pool in the cluster configuration, define at least two parity groups for cluster management LU and user LU in due consideration of "Note" (DSKST 03-0041) and "Capacity" (Table3.2.2-6 (DSKST 03-0047)).

(2) Creating LDEV
Configure LDEV.
When creating the cluster management LU in the DP pool, create at least two LDEVs for cluster management LU and user LU.

Table 3.2.2-1 Setting Contents of LDEV

#	Item		Configuration/Confirmation
1	Provisioning Type		Set [Basic].
2	System Type		Set [Open].
3	Emulation Type		Set [Open-V] (*2).
4	Parity Group Selection / Pool Selection / External Volume Selection	Drive Type	For USP V/USP VM, specify "FC", "SATA" or "SSD". For VSP/VSP G1000/VSP Gx00/VSP Fx00/HUS VM, specify "SAS", "SATA" or "SSD". (If the installed drive is FMD, display "SSD (FMD)". And if the installed drive is FMC, display "SSD (FMC)".)
		RAID level	For the RAID level of the DP pool which assigns the cluster management LU and command device, create with RAID5 or RAID6. For the RAID level of the RAID group (DP pool) which only assigns the user LU, create with one of RAID1, RAID5, or RAID6.
5	LDEV Capacity		Set the LDEV capacity to be created. (Set the capacity larger than the capacity stated in the Table .2.2-6 "Capacity")
6	Capacity Unit		Set the capacity unit when specify the size. Select from either Mbyte or Blocks.
7	Number of LDEVs per Free Space(*1)		Set the number of LDEVs to be created.
8	LDEV Name		Set the fixed character string for the first character of LDEV name and the starting number of LDEV name.
9	Format Type		Select one of the following format types depending on the situation. Quick Format / Normal Format / no Format

*1: LDEVs are created for the number of LDEVs specified in "Number of LDEVs".
However all are created in the same size.
*2: cluster management LU and command device need to be open LDEV.

Copyright © 2010, 2016, Hitachi, Ltd.

(2) LDEV format
Refer to the maintenance manual of the disk array subsystem and make sure that the LDEVs are formatted to the disk array subsystem on the result of process on (1).

(3) Creating DP Pool

(a) In the single node configuration using a disk array subsystem

Refer to “Maintenance manual” of the disk array subsystem, create one user LU for one DP pool as shown in Figure 3.2.2-3.

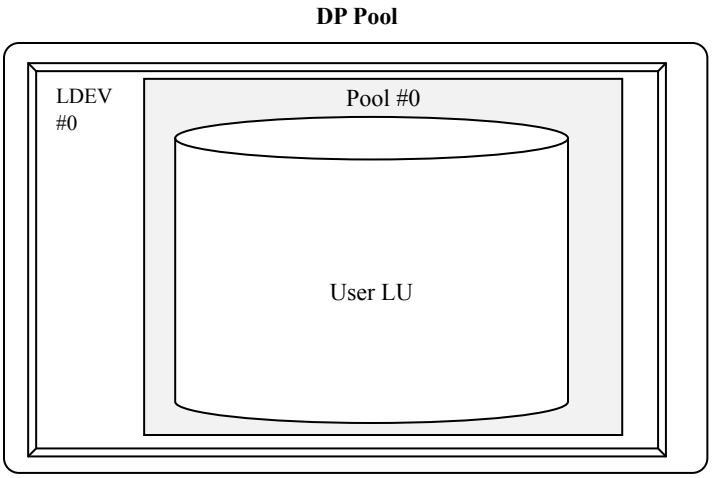

Figure 3.2.2-3 DP pool and user LU configurations in the single node configuration

Copyright © 2013, Hitachi, Ltd.

(b) In the cluster configuration using a disk array subsystem

This section describes the setting example for the case of using two DP pools. This example shows the case of using DP pool #000 and DP pool #001.
When creating the cluster management LU on the DP pool, create at least two DP pools for the cluster management LU and user LU after checking the conditions stated in “Note” (DSKST 03-0041).
Refer to the Parity Group window and Pool window in the disk array subsystem of “Maintenance manual”, set the setting contents shown in the Table 3.2.2-2.

Table 3.2.2-2 Setting Contents of the DP pool in the Cluster Configuration

#	Item		Setting/confirming contents
1	Pool Type		Select [Dynamic Provisioning]. When using the multi-tier function, select [Dynamic Tiering].
2	System Type		Set [Open].
3	Pool Volume Selection	Drive Type	For USP V or USP VM, specify “FC”, “SATA” or “SSD”. For VSP, VSP G1000, VSP Gx00/VSP Fx00 or HUS VM, specify “SAS”, “SATA” or “SSD”. (If the installed drive is FMD, display “SSD (FMD)”. And if the installed drive is FMC, display “SSD (FMC)”.)
		RAID level	For the RAID level of the DP pool which assigns the cluster management LU and command device, create with RAID5 or RAID6. For the RAID level of the RAID group (DP pool) which only assigns the user LU, create with one of RAID1, RAID5 or RAID6.
4	Pool Name		Set the fixed character string for the first character of pool name and the starting number of pool name.

Figure 3.2.2-4 shows the DP pool configuration to be used in the Cluster Configuration.

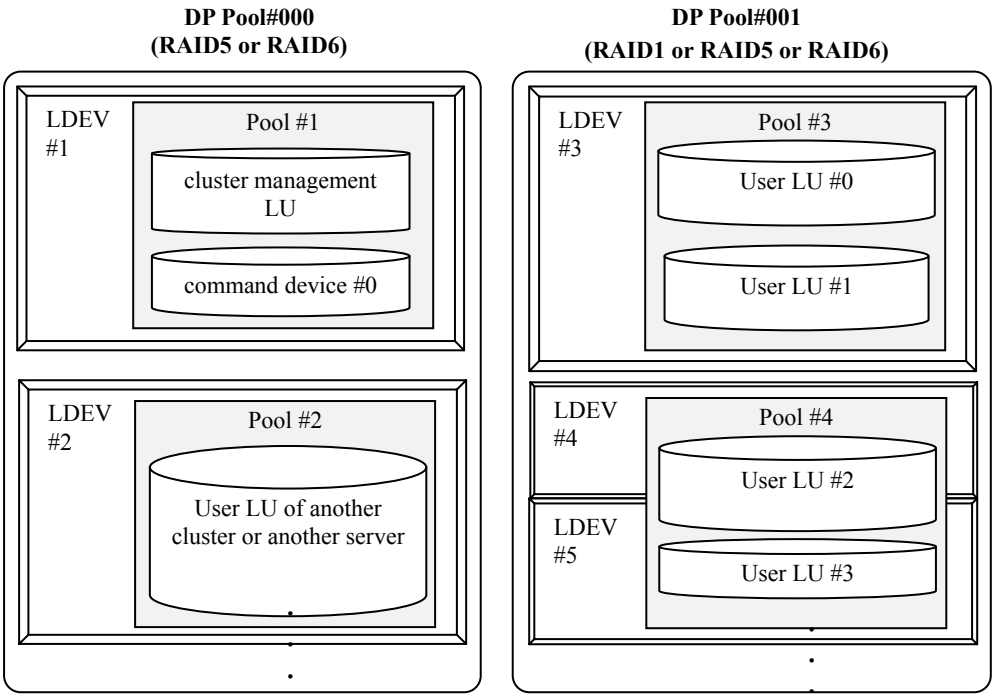

Figure 3.2.2-4 DP pool configuration example in the Cluster Configuration

Copyright © 2013, 2016, Hitachi, Ltd.

(4) Creating Virtual VOL and logical unit (LU)

(a) In the single node configuration

Set the contents in Tables 3.2.2-3 and 3.2.2-4 with reference to the maintenance manual of the disk array subsystem.

Table 3.2.2-3 LU Setting and Confirmation Item

#	Item	Setting / Confirming contents
1	Logical Unit number	Set the Logical Unit number.
2	Capacity	Set the capacity of LU to be created. (See “capacity” in Table 3.2.2-6.)

Table 3.2.2-4 LU that corresponds to HDI

#	LU	RAID group number	LUN	Capacity
1	User LU	Arbitrary	Arbitrary	For the DP pool, 128TB (The OS version is 4.0.0-XX or later)

Copyright © 2013, 2016, Hitachi, Ltd.

(b) In the cluster configuration using a disk array subsystem

When creating the cluster management LU on the DP pool, set the following setting items after checking the conditions stated in “Note” (DSKST 03-0041).

(i) Set the virtual VOL.

Table 3.2.2-5 Setting Contents of the Virtual Vol

#	Item		Setting / Confirming contents
1	Provisioning Type		Set [Dynamic Provisioning].
2	System Type		Set [Open].
3	Emulation Type		Set [Open-V].
4	Parity Group Selection / Pool Selection / External Volume Selection	Drive Type	For USP V or USP VM, specify “FC”, “SATA” or “SSD”. For VSP, VSP G1000, VSP Gx00/VSP Fx00 or HUS VM, specify “SAS”, “SATA” or “SSD”. (If the installed drive is FMD, display “SSD (FMD)”. And if the installed drive is FMC, display “SSD (FMC)”.)
		RAID level	For the RAID level of the DP pool which assigns the cluster management LU and command device, create with RAID5 or RAID6. For the RAID level of the RAID group (DP pool) which only assigns the user LU, create with one of RAID1, RAID5 or RAID6.
5	LDEV Capacity		Set the VOL capacity to be created. (Set the capacity larger than the capacity stated in the Table 3.2.2-6 “Capacity”)
6	Capacity Unit		Set the capacity unit when specify the size. Select from either Mbyte or Blocks.
7	Number of LDEVs (*1)		Set the virtual VOL to be created.
8	LDEV Name		Set the fixed character string for the first character of virtual VOL name and the starting number of virtual VOL name.
9	Format Type		Select one of the following format types depending on the situation. Quick Format / Normal Format / no Format
10	Option	Full Allocation (*2)	Set [Enable]. To allocate the cluster management LU, be sure to set [Enable].

*1: Virtual VOLs are created for the number of LDEVs specified in “Number of LDEVs”.
However all are created in the same size.
*2: This item is displayed VSP G1000 microcode 80-02-2x or later.

Copyright © 2013, 2017, Hitachi, Ltd.

(ii) Setting capacity of the virtual VOL

Link the created multiple LEDVs and change the capacity of the virtual VOL.
If the capacity of each created LDEV is less than the capacity stated in Table 3.2.2-6, link the LDEV to be more than the capacity stated in Table 3.2.2-6.
In case of USP V or USP VM, refer to "LUN Expansion (LUSE) User's Guide", for VSP and VSP G1000, refer to "Provisioning Guide for Open Systems", and for HUS VM and VSP Gx00/VSP Fx00, refer to "Provisioning Guide" to set each capacity of LDEV to be more than the capacity stated in Table 3.2.2-6.

Table 3.2.2-6 Capacity of LU

#	LU type	LDEV number or LDEV number on the top when multiple LDEVs are linked together (*1)	Capacity
1	Cluster management LU(*5)	"XX:XX:00h"	70GB or more
2	Command Device(*2,* 3)	"XX:XX:01h"	48MB(or more)
3	User LU	Arbitrary	130MB(or more)(*4)

*1: LDEV number "XX:XX:XXh" is a setting example ("LDKC number: CU number: LDEV number"). Number does not have to specify for the LDEV if it is unused LDEV or usable LDEV for the system of Hitachi Data Ingestor.
*2: Note that the method to create a command device is different with the other method of LDEV creation because the command device cannot be set to the multiply linked LDEVs. (For the details, see "Storage Navigator User's Guide" for USP V or USP VM, "Provisioning Guide for Open Systems" for VSP or VSP G1000, and "Provisioning Guide" of the disk array subsystem for VSP Gx00/VSP Fx00 or HUS VM.)
*3: Because the command device security is not supported, do not use this when putting a command device attribute in the Hitachi Data Ingestor.
*4: 128MB (or more) if LVM is not used.
*5: If VSP Gx00/VSP Fx00 or VSP G1000 and the DKCMAIN program version is 08-02-2x or later, you can create the cluster management LU using the DP pool by complying with the following restrictions.
(i) Restrictions for the construction that does not use Shadow Image/True Copy
- Do not create the command device, or even if the command device is created, do not map the command device on the port to which Hitachi Data Ingestor is connected
- When creating the cluster management LU, enable the page reservation function.

(ii) Construction that uses Shadow Image/True Copy
- Construct at least one DP pool with RAID6, and create the shared LU using the DP pool.
- When creating the shared LU, enable the page reservation function.

(5) Confirmation of LU

Confirm the LU created on the disk array subsystem.
Refer to the "Mainframe System Administrator Guide" for USP V, USP VM, VSP, VSP G1000, VSP Gx00/VSP Fx00, or HUS VM, and make sure that the cluster management LU and the command device set to the disk array subsystem are described as Table 3.2.2-2, Table 3.2.2-5 and Table 3.2.2-6.

(6) LU mapping

Refer to (5) of Disk Setting "3.2.1 Setting and confirming LUs when not using DP pool" (DSKST 03-0020) and map the LU.

Copyright © 2013, 2016, Hitachi, Ltd.

3.3 Acquiring WWNs of Nodes

For acquiring WWN of the node, refer to "B.5.1 Acquiring WWNs of Nodes."

Copyright © 2010, 2012, Hitachi, Ltd.

This page is for editorial purpose only.

Copyright © 2010, 2012, Hitachi, Ltd.

3.4 Setting and Confirming System Parameter

Execute various setting for each FC port of disk array subsystem.

Refer to the “Mainframe System Administrator Guide” for USP V, USP VM, VSP, VSP G1000, VSP Gx00/VSP Fx00 or HUS VM, and confirm that the contents of setting/confirming in Table 3.4-1 are set.

Table 3.4-1 Fibre Channel port setting/ confirming

#	Item	Setting/confirming contents	Setting Target
1	Host speed (*1)	Set “Auto”.	Each FC port of USP V, USP VM, VSP, VSP G1000, VSP Gx00/VSP Fx00, or HUS VM
2	Port address (*2)	Set from the dropdown list.	Each FC port of USP V, USP VM, VSP, VSP G1000, VSP Gx00/VSP Fx00, or HUS VM
3	Topology	Set “FC_AL” in the case of direct connection. Set “Point-to-point” when SW is connected.	Each FC port of USP V, USP VM, VSP, VSP G1000, VSP Gx00/VSP Fx00, or HUS VM

*1: By the type of SWs, there is a case that the fixed setting (1Gbps, 2Gbps, 4Gbps, 8Gbps) must be set to match the host speed of SW.

*2: Set the address displayed as default unless otherwise the special setting is required.

(a) When setting/ confirming contents are not set
Set the confirmation contents by referring to “Maintenance Manual” of Disk array subsystem.

(b) When setting/ confirming contents are set, or set at (a).
Proceed to Disk Setting “3.5 Setting and Confirming the LUN Manager” (DSKST 03-0080).

Copyright © 2010, 2016, Hitachi, Ltd.

3.5 Setting and Confirming LUN Manager

Execute setting/ Confirming of LUN security.

The LUN security is obligatory in the configuration of HDI for HCP.

(1) LUN security setting
Set the LUN security of each FC port on disk array subsystem.
This is not necessary to set if the license of "LUN Manager" is not registered. Proceed to step (2).
Confirm that the "LUN security" in Table 3.5-1 is set to "Enabled" by referring to "Storage Navigator User's Guide" for USP V and USP VM, and "Provisioning Guide for Open Systems" for VSP and VSP G1000, and "Provisioning Guide" of the disk array subsystem for VSP Gx00/VSP Fx00 or HUS VM.

Table 3.5-1 LUN security setting/ confirming items

#	Item	Setting/confirming contents	Setting Target
1	LUN Security	Set to "Enabled".	Each FC port of USP V, USP VM, VSP, VSP G1000, VSP Gx00/VSP Fx00 or HUS VM

(a) When "Disabled" is set
Set the LUN security to "Enabled" by referring to "Storage Navigator User's Guide" for USP V and USP VM, "Provisioning Guide for Open Systems" for VSP and VSP G1000, and "Provisioning Guide" for HUS VM, VSP Gx00/VSP Fx00.

(b) When "Enabled" is set or set to "Enabled" at (a)
Proceed to (2).

(2) Host group setting, Option setting
Set the host group of each FC port in the disk array subsystem and the environment of the target to be connected.
This is not necessary to set if the license of "LUN Manager" is not registered. Proceed to step (3).
Confirm if the setting described in Table 3.5-2 Setting/ Confirming contents are set by referring to "Storage Navigator User's Guide" for USP V and USP VM, "Provisioning Guide for Open Systems" for VSP and VSP G1000, and "Provisioning Guide" for HUS VM and VSP Gx00/VSP Fx00 and Disk setting "4.2 Setting Example of USP V, USP VM, VSP, VSP G1000, VSP Gx00/VSP Fx00, and HUS VM" (DSKST 04-0060).

Table 3.5-2 Setting/ Confirming contents of the target to be connected

#	Item	Setting/confirming contents	Setting Target
1	Group Name	Set the name of host group.	Each FC port of USP V, USP VM, VSP, VSP G1000, VSP Gx00/VSP Fx00, or HUS VM
2	Host Mode	Set "Standard".	Each FC port of USP V, USP VM, VSP, VSP G1000, VSP Gx00/VSP Fx00, or HUS VM
3	Option	Set "Default (not checked for all the items)".	Each FC port of USP V, USP VM, VSP, VSP G1000, VSP Gx00/VSP Fx00, or HUS VM

(a) If it is not set.
Set the setting/confirming contents in Table 3.5-2 by referring to "Storage Navigator User's Guide" for USP V and USP VM, "Provisioning Guide for Open Systems" for VSP and VSP G1000, and "Provisioning Guide" for HUS VM and VSP Gx00/VSP Fx00, and Disk setting "4.2 Setting Example of USP V, USP VM, VSP, VSP G1000, VSP Gx00/VSP Fx00, and HUS VM" (DSKST 04-0060).

(b) If it is set or set it at (a).
Proceed to step (3).

Copyright © 2010, 2016, Hitachi, Ltd.

(3) Host registration
Set a host to host group.
This is not necessary if the license of "LUN Manager" is not set. Proceed to step (4).
Set the setting/confirming contents in Table 3.5-3 by referring to "Storage Navigator User's Guide" for USP V and USP VM, "Provisioning Guide for Open Systems" for VSP and VSP G1000, and "Provisioning Guide" for HUS VM and VSP Gx00/VSP Fx00 and Disk setting "4.2 Setting Example of USP V, USP VM, VSP, VSP G1000, VSP Gx00/VSP Fx00, and HUS VM" (DSKST 04-0060).

Table 3.5-3 Setting/ Confirming items of host for host group

#	Item	Setting/confirming contents	Setting Target
1	WWN	Set WWN of each node.	Each host group
2	Nickname	Set a nickname.	Each host group

(a) If it is not set
Set the setting/ confirming contents in Table 3.5-3 by referring to "Storage Navigator User's Guide" for USP V and USP VM, "Provisioning Guide for Open Systems" for VSP and VSP G1000, and "Provisioning Guide" for HUS VM and VSP Gx00/VSP Fx00 and Disk setting "4.2 Setting Example of USP V, USP VM, VSP, VSP G1000, VSP Gx00/VSP Fx00, and HUS VM" (DSKST 04-0060).

(b) If it is set or set it at (a).
Proceed to step (4).

(4) Setting/ confirming of LU path
Set the LDEV to be registered to host group.
Set the setting/confirming contents in Table 3.5-4 by referring to "Storage Navigator User's Guide" for USP V and USP VM, "Provisioning Guide for Open Systems" for VSP and VSP G1000, and "Provisioning Guide" for HUS VM and VSP Gx00/VSP Fx00 and Disk setting "4.2 Setting Example of USP V, USP VM, VSP, VSP G1000, VSP Gx00/VSP Fx00, and HUS VM" (DSKST 04-0060).

Table 3.5-4 Setting/ Confirming items of LU path

#	Item	Setting/confirming contents	Setting Target
1	CU	Set the CU of LDEV to be set to host group	Each host group
2	LDEV	Set the LDEV to be set to host group	Each host group

(a) If it is not set.
Set the setting/confirming contents in Table 3.5-4 by referring to "Storage Navigator User's Guide" for USP V and USP VM, "Provisioning Guide for Open Systems" for VSP and VSP G1000, VSP Gx00/VSP Fx00, and "Provisioning Guide" for HUS VM and Disk setting "4.2 Setting Example of USP V, USP VM, VSP, VSP G1000, VSP Gx00/VSP Fx00, and HUS VM" (DSKST 04-0060).

(b) If it is set or set it at (a).
Proceed to step (5).

Copyright © 2010, 2016, Hitachi, Ltd.

(5) Setting/ confirming of user authentication
Set the host group, FC port, FC switch of the disk array subsystem not to execute the user authentication.
This is not necessary if the license of “LUN Manager” is not registered.
Refer to “Storage Navigator User’s Guide” for USP V and USP VM, “Provisioning Guide for Open Systems” for VSP and VSP G1000, and “Provisioning Guide” for HUS VM and VSP Gx00/VSP Fx00 and confirm that the setting/confirming contents in Table 3.5-5 are set.

Table 3.5-5 Setting/ Confirming items for the user authentication

#	Item		Setting/confirming contents
1	User Authentication	Host authentication	Set to “Disabled”.
2		Host group authentication	Set to “Disabled”.
3		FC switch authentication	Set to “Disabled”.

(a) If it is not set
Set the setting/ confirming contents in Table 3.5-5 by referring to “Storage Navigator User’s Guide” for USP V and USP VM, “Provisioning Guide for Open Systems” for VSP and VSP G1000, and “Provisioning Guide” for HUS VM and VSP Gx00/VSP Fx00.

(b) If it is set or set it at (a)
Disk setting is completed.

Copyright © 2010, 2016, Hitachi, Ltd.

Chapter 4 Disk Array Subsystem Connection Specifications for Each Model

This chapter describes the connection examples on the disk array subsystem of AMS2000 Series, MSS, HUS100 Series, USP V, USP VM, VSP, VSP G1000, VSP Gx00/VSP Fx00, and HUS VM.

4.1 Setting Example of AMS2000 Series, MSS, and HUS100 Series

This chapter shows the disk array subsystem connection patterns in the configuration of HDI for HCP, the configuration of HDI for Cloud.

Table 4.1-1 shows the notations used in the following figures of setting examples.

Table 4.1-1 Notations

No.	Notation in figure	Description	Remarks
1	fc4	FC port 4 installed in the expansion slot 3 of each node	(*1)
2	fc5	FC port 5 installed in the expansion slot 3 of each node	(*1)
3	fc6	FC port 6 installed in the expansion slot 4 of each node	(*1)
4	fc7	FC port 7 installed in the expansion slot 4 of each node	(*1)
5	Wxx	WWN of the FC port of the expansion slot 3	—

*1: The case where the port numbers of the FC port are fc4 to fc7 is an example in this chapter. However, as the port numbers of the FC port are different depending on the target model, refer to "A.2.2.2 Port arrangement and port names" for details.

Copyright © 2010, 2016, Hitachi, Ltd.

4.1.1 The configuration of HDI for HCP

Table 4.1.1-1 shows the disk array subsystem connection patterns.
Refer to the relevant number of figure depending on “Model type connected to Hitachi Data Ingestor”, “Number of disk array subsystem ports to be used” and “Number of node ports to be used”.

Table 4.1.1-1 Disk Array Subsystem Connection Pattern

No.	Model name	Type	Number of disk array subsystem ports to be used (*1)	FC-SW existing Number of node ports to be used (*1) 4/4 (One FC card)
1	AMS2500 AMS2300 AMS2100	DF800H, DF800EH DF800M, DF800EM DF800S, DF800ES	4/4	Figure 4.1.1-1
2	AMS2500 AMS2300 AMS2100 (DF800ES) HUS110 HUS130 HUS150	DF800H, DF800EH DF800M, DF800EM DF800ES, DF850-CBXSL DF850-CBXSS DF850-CBSL DF850-CBSS DF850-CBL	4/8	Figure 4.1.1-1 (*2)
		DF800H, DF800EH DF800EM, DF850-CBXSL DF850-CBXSS DF850-CBSL DF850-CBSS DF850-CBL	4/16	Figure 4.1.1-1 (*2)

*1: In the expression of “x/y”, “x” is the number of ports to be used, and “y” is the maximum number of ports to be installed.
The number of using node ports is the maximum of four ports per cluster because one HBA with two ports is installed for each node.
For AMS2100 (DF800S), the maximum number of ports is four because one I/F board with two ports is installed for one controller.
For AMS2300 (DF800M) and AMS2100 (DF800S) the maximum number of ports is eight because one I/F board with four ports is installed for one controller.
For AMS2300 (DF800EM), the maximum number of ports is sixteen because two four-port I/F boards are installed for each controller.

*2: Even if the ports on the side of Disk Array Subsystem increase, they are not used, and therefore, the connection configuration does not change.
The ports on the side of Disk Array Subsystem become the remainder.

Copyright © 2010, 2012, Hitachi, Ltd.

4.1.1.1 Four FC ports (0A, 0B, 1B, 1A) are used, one HBA with four ports are used as the node with the switch

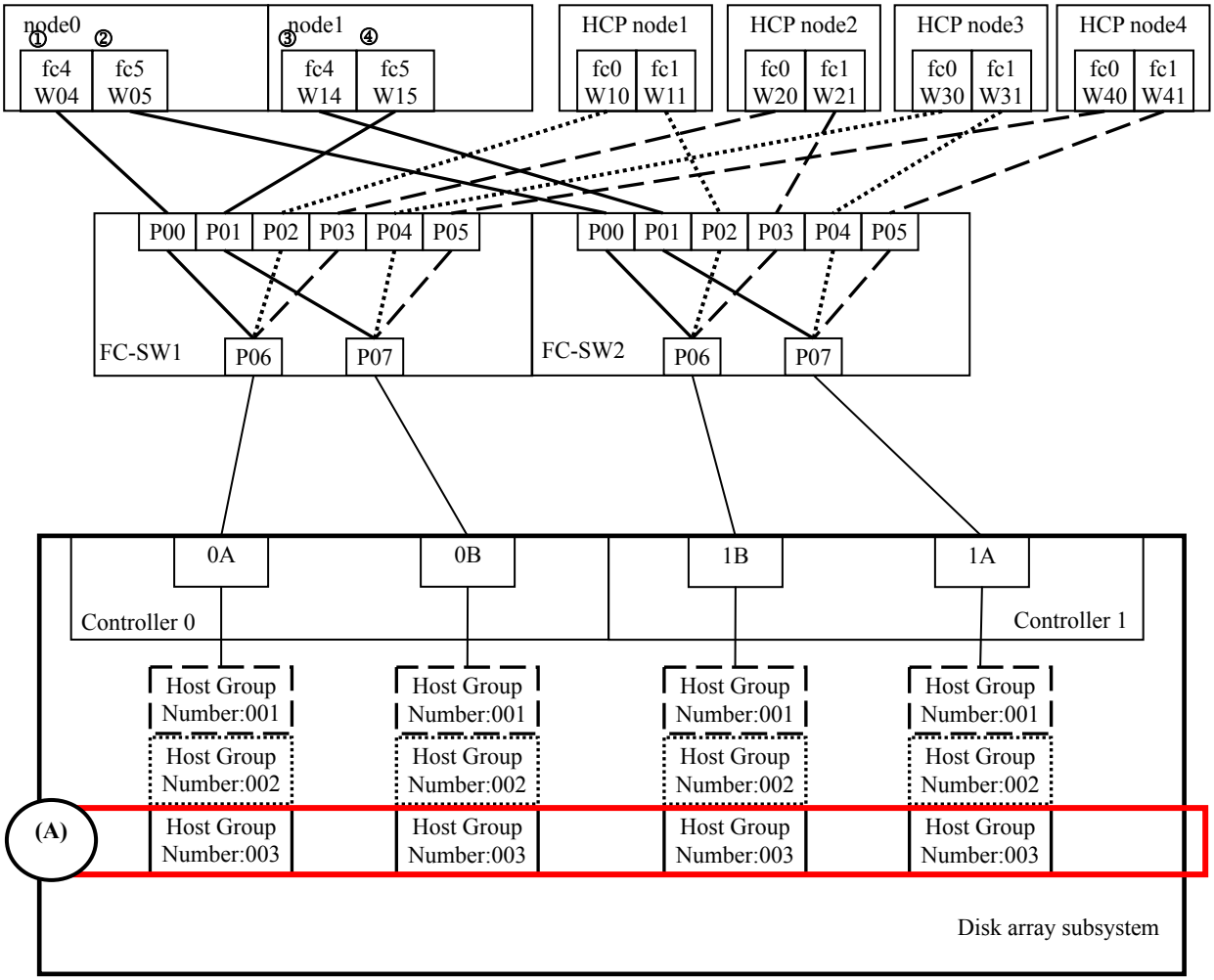

Figure 4.1.1-1 4 FC Ports used, 1 HBA used as the nodes, with a Switch

The Host Group of (A) (Host Group number 003) should be the host group that maps the LU of Hitachi Data Ingestor.
For Hitachi Data Ingestor, use a host group number which is not used for HCP.

NOTE:
- The FC-SW zoning is necessary.
  Request the system administrator to execute the WWN zoning.
  Note that group zoning cannot be used.
- Under the Host Group used for HCP, do not map the LU (cluster management LU, User LU) used in the Hitachi Data Ingestor.

Copyright © 2011, 2012, Hitachi, Ltd.

Table 4.1.1-2 Setting Example on Storage Side

HLUN	Port 0A ①			Port 0B ④			Port 1A ③			Port 1B ②		
	HG#001	HG#002	HG#003	HG#001	HG#002	HG#003	HG#001	HG#002	HG#003	HG#001	HG#002	HG#003
	WWN: W10	WWN: W20	WWN: W04	WWN: W30	WWN: W40	WWN: W15	WWN: W31	WWN: W41	WWN: W14	WWN: W11	WWN: W21	WWN: W05
0	HCP OS LU #1	HCP OS LU #2	cluster management LU	HCP OS LU #3	HCP OS LU #4	cluster management LU	HCP OS LU #3	HCP OS LU #4	cluster management LU	HCP OS LU #1	HCP OS LU #2	cluster management LU
1	HCP DATA LU #1	HCP DATA LU #2	User LU #1	HCP DATA LU #3	HCP DATA LU #4	User LU #1	HCP DATA LU #3	HCP DATA LU #4	User LU #1	HCP DATA LU #1	HCP DATA LU #2	User LU #1
2	HCP DATA LU #5	HCP DATA LU #6	User LU #2	HCP DATA LU #7	HCP DATA LU #8	User LU #2	HCP DATA LU #7	HCP DATA LU #8	User LU #2	HCP DATA LU #5	HCP DATA LU #6	User LU #2
to	to	to	to	to	to	to	to	to	to	to	to	to
129	HCP DATA LU #2	HCP DATA LU #1	User LU #129	HCP DATA LU #4	HCP DATA LU #3	User LU #129	HCP DATA LU #4	HCP DATA LU #3	User LU #129	HCP DATA LU #2	HCP DATA LU #1	User LU #129
130	HCP DATA LU #6	HCP DATA LU #5	User LU #130	HCP DATA LU #8	HCP DATA LU #7	User LU #130	HCP DATA LU #8	HCP DATA LU #7	User LU #130	HCP DATA LU #6	HCP DATA LU #5	User LU #130
to	to	to	to	to	to	to	to	to	to	to	to	to
254	—	—	User LU #254	—	—	User LU #254	—	—	User LU #254	—	—	User LU #254
255	—	—	User LU #255	—	—	User LU #255	—	—	User LU #255	—	—	User LU #255

NOTE:
- For the OS version 4.2.2-XX and later, refer to Disk Setting "Table 4.3-2 Comparison Tables of Setting Examples on Storage Side 1 (DSKST 04-0210)" and use appropriate values.
- Be sure to map the cluster management LU to HLUN0.
- For the mapping to be used in the Hitachi Data Ingestor, be sure to map the same LU to the same HLUN as shown in the parts enclosed by the bold lines in Table 4.1.1-2.
- Assign the node WWN (①, ②, ③ and ④) written in "Table 4.1.1-3 Worksheet for Memo of WWN" according to "Figure 4.1.1-1 4 FC Ports used, 1 HBA used as the nodes, with a Switch", "Table 4.1.1-2 Setting Example on Storage Side", "Figure 4.1.1-2 Node0 Emulex Utility Port Screen (example)" and "Figure 4.1.1-3 Node1 Emulex Utility Port Screen (example)".

Copyright © 2010, 2016, Hitachi, Ltd.

```
Emulex Light Pulse BIOS Utility, ZB2.01a2
Copyright (c) 1997-2007 Emulex. All rights reserved.

Emulex Adapters in the System:

1. LPe11002- M4:     PCI Bus, Device, Function (02, 00, 00)  ①
2. LPe11002- M4:     PCI Bus, Device, Function (02, 00, 01)  ②



Enter a Selection:

Enter <x> to Exit
```

Figure 4.1.1-2 Node0 Emulex Utility Port Screen (example)

```
Emulex Light Pulse BIOS Utility, ZB2.01a2
Copyright (c) 1997-2007 Emulex. All rights reserved.

Emulex Adapters in the System:

1. LPe11002- M4:     PCI Bus, Device, Function (02, 00, 00)  ③
2. LPe11002- M4:     PCI Bus, Device, Function (02, 00, 01)  ④



Enter a Selection:

Enter <x> to Exit
```

Figure 4.1.1-3 Node1 Emulex Utility Port Screen (example)

Table 4.1.1-3 Worksheet for Memo of WWN

	PCI Bus, Device, Function (02, 00, 00)	PCI Bus, Device, Function (02, 00, 01)
node0	①	②
node1	③	④

Copyright © 2010, Hitachi, Ltd.

4.1.2 This Page is Intentionally Blanked

Copyright © 2010, 2011, Hitachi, Ltd.

This page is for editorial purpose only.

Copyright © 2010, 2011, Hitachi, Ltd.

4.1.3 The configuration of HDI for Cloud

Table 4.1.3-1 shows the disk array subsystem connection patterns in the configuration of HDI for Cloud. Refer to the relevant number of figure depending on “Model type connected to HDI”, “Number of disk array subsystem ports to be used” and “Number of node ports to be used”.

Table 4.1.3-1 Disk array subsystem connection patterns in the configuration of HDI for Cloud

No.	Model name	Type	Number of disk array subsystem ports to be used (*1)	FC-SW not existing			FC-SW existing		
				Number of node ports to be used (*1)			Number of node ports to be used (*1)		
				4/4 (One FC card)(*5)	4/8 (Two FC card)(*5)	8/8(Two FC card)	4/4(One FC card)	4/8(Two FC card)	8/8(Two FC card)
1	MSS(*7) AMS2100	DF800E-XS DF800E-S DF800S	2/4	(*2)	(*2)	(*2)	Figure 4.1.3-4 (*5)	Figure 4.1.3-5 (*5)	(*6)
2			4/4	Figure 4.1.3-1 (*3)	Figure 4.1.3-2	(*2)	Figure 4.1.3-7	Figure 4.1.3-8	Figure 4.1.3-9
3	AMS2100 AMS2300 HUS110 HUS130 HUS150	DF800E-S DF800E-M DF800M DF850-CBXSL DF850-CBXSS DF850-CBSL DF850-CBSS DF850-CBL	2/8	(*2)	(*2)	(*2)	Figure 4.1.3-4 (*5)	Figure 4.1.3-5 (*5)	(*6)
4			4/8	Figure 4.1.3-1 (*3,*4)	Figure 4.1.3-2 (*4)	(*2)	Figure 4.1.3-7	Figure 4.1.3-8	Figure 4.1.3-9
5			8/8	(*2)	(*2)	Figure 4.1.3-3	Figure 4.1.3-12	Figure 4.1.3-13	Figure 4.1.3-11
6	AMS2300 AMS2500 HUS110 HUS130 HUS150	DF800E-M DF800E-H DF800H DF850-CBXSL DF850-CBXSS DF850-CBSL DF850-CBSS DF850-CBL	4/16	Figure 4.1.3-1 (*3,*4)	Figure 4.1.3-2 (*4)	(*2)	Figure 4.1.3-7	Figure 4.1.3-8	Figure 4.1.3-9
7			8/16	(*2)	(*2)	Figure 4.1.3-10 (*3,*4)	Figure 4.1.3-12	Figure 4.1.3-13	Figure 4.1.3-11

*1: In the expression of “x/y”, “x” is the number of ports to be used, and “y” is the maximum number of ports to be installed.
*2: Not supported because connection is not physically possible without an FC-SW.
*3: Tape connection is not possible as all the ports of the node are used and no FC switch is set at the same time.
*4: Even if the ports on the side of Disk Array Subsystem increase, they are not used, and therefore, the connection configuration does not change.
The ports on the side of Disk Array Subsystem become the remainder.
*5: The user LU and the cluster management LU must be placed in the same host group.
*6: Not supported by HDI.
*7: HDI does not support MSS because Basic Configuration is not supported.

Copyright © 2011, 2013, Hitachi, Ltd.

4.1.3.1 4(8,16) FC ports installed/4 ports used in disk array subsystem and 4 FC ports installed and used in nodes (without FC switch)

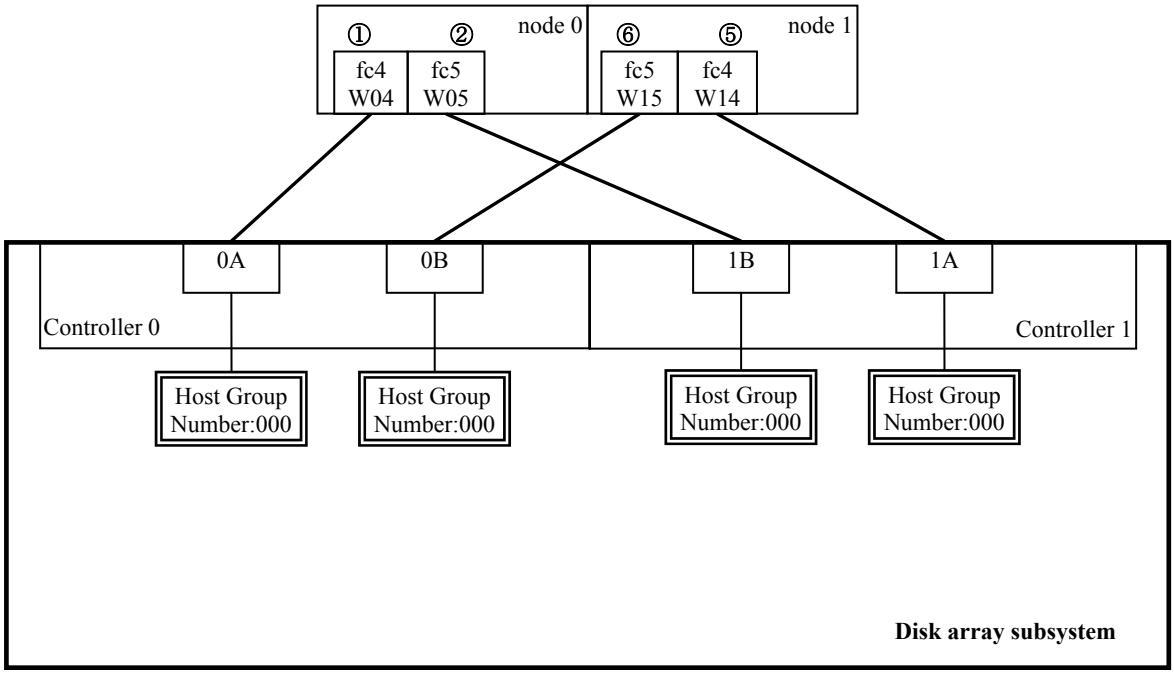

Figure 4.1.3-1 4 FC ports used, 1 HBA and 4 ports in nodes, without switch

NOTE: If additional I/F board of FC are installed, consider 0B to be 0E and 1B to be 1E.

Table 4.1.3-2 Setting Example on Storage Side

HLUN	Port 0A	Port 0B	Port 1A	Port 1B
	HG#000	HG#000	HG#000	HG#000
	① WWN:W04	⑥ WWN:W15	⑤ WWN:W14	② WWN:W05
0	cluster management LU	cluster management LU	cluster management LU	cluster management LU
1	Command device 0	Command device 0	Command device 0	Command device 0
2	User LU #1	User LU #1	User LU #1	User LU #1
to	to	to	to	to
255	User LU #254	User LU #254	User LU #254	User LU #254

NOTE:
- For the OS version 4.2.2-XX and later, refer to Disk Setting "Table 4.3-5 Comparison Tables of Setting Examples on Storage Side 4 (DSKST 04-0250)" and use appropriate values.
- Ensure HLUN0 is mapped to cluster management LU.
- Ensure the same HLUN is mapped to the same LU.
- Assign the WWN of the node which is recorded on the worksheet for memo of WWN (refer to "B.5.1 Acquiring WWNs of Nodes") to the host group on the side of the disk array subsystem.
- This configuration can handle up to 254 user LUs.
  However, up to 255 LUs can be handled in the configuration of HDI for Cloud because no command device is used.
- For convenience of drawing the figure, the FC ports in the node 1 are mirrored (left and right are reversed).

Copyright © 2011, 2016, Hitachi, Ltd.

4.1.3.2 4(8,16) FC ports installed/4 ports used in disk array subsystem and 8 FC ports installed and 4 ports used in nodes (without FC switch)

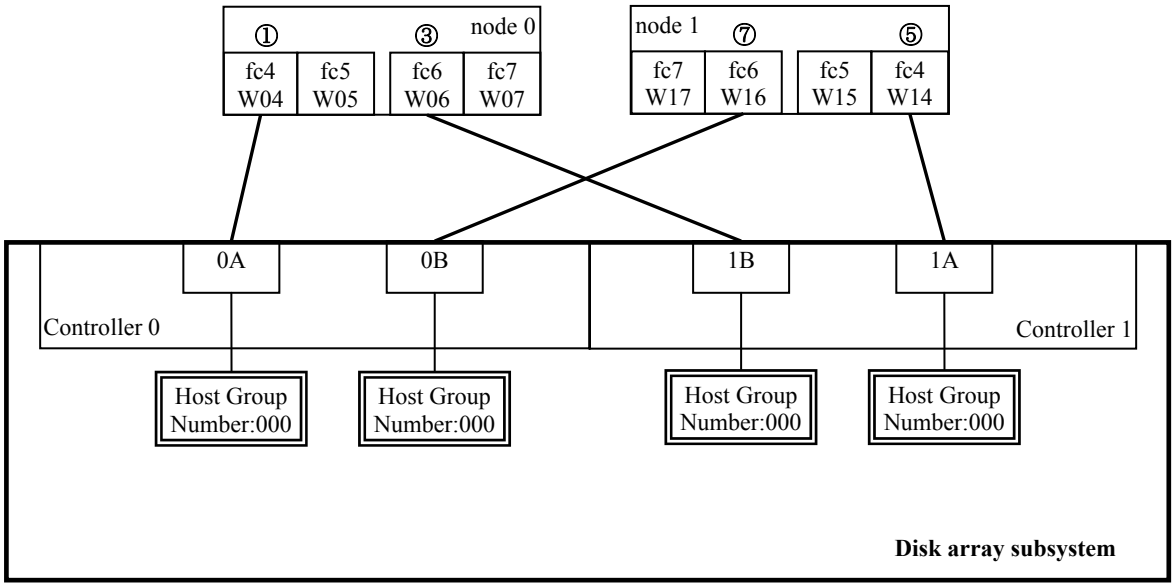

Figure 4.1.3-2 4 FC ports used, 2 HBAs and 4 ports in nodes, without switch

NOTE: If additional I/F board of FC are installed, consider 0B to be 0E and 1B to be 1E.

Table 4.1.3-3 Setting Example on Storage Side

HLUN	Port 0A	Port 0B	Port 1A	Port 1B
	HG#000	HG#000	HG#000	HG#000
	① WWN:W04	⑦ WWN:W16	⑤ WWN:W14	③ WWN:W06
0	cluster management LU	cluster management LU	cluster management LU	cluster management LU
1	Command device 0	Command device 0	Command device 0	Command device 0
2	User LU #1	User LU #1	User LU #1	User LU #1
to	to	to	to	to
255	User LU #254	User LU #254	User LU #254	User LU #254

NOTE:
- User LUs cannot be mapped up to the maximum in this configuration. The same number of HLUNs as the number of LUs that the OS can recognize per port is to be mapped.
- For the OS version 4.2.2-XX and later, refer to Disk Setting "Table 4.3-5 Comparison Tables of Setting Examples on Storage Side 4 (DSKST 04-0250)" and use appropriate values.
- Ensure the same HLUN is mapped to the same LU.
- Ensure HLUN0 is mapped to cluster management LU.
- Assign the WWN of the node which is recorded on the worksheet for memo of WWN (refer to "B.5.1 Acquiring WWNs of Nodes") to the host group on the side of the disk array subsystem.
- This configuration can handle up to 254 user LUs.
  However, up to 255 LUs can be handled in the configuration of HDI for Cloud because no command device is used.
- For convenience of drawing the figure, the FC ports in the node 1 are mirrored (left and right are reversed).

Copyright © 2011, 2016, Hitachi, Ltd.

4.1.3.3 8 FC ports installed and used in disk array subsystem and 8 FC ports installed and used in nodes (without FC switch)

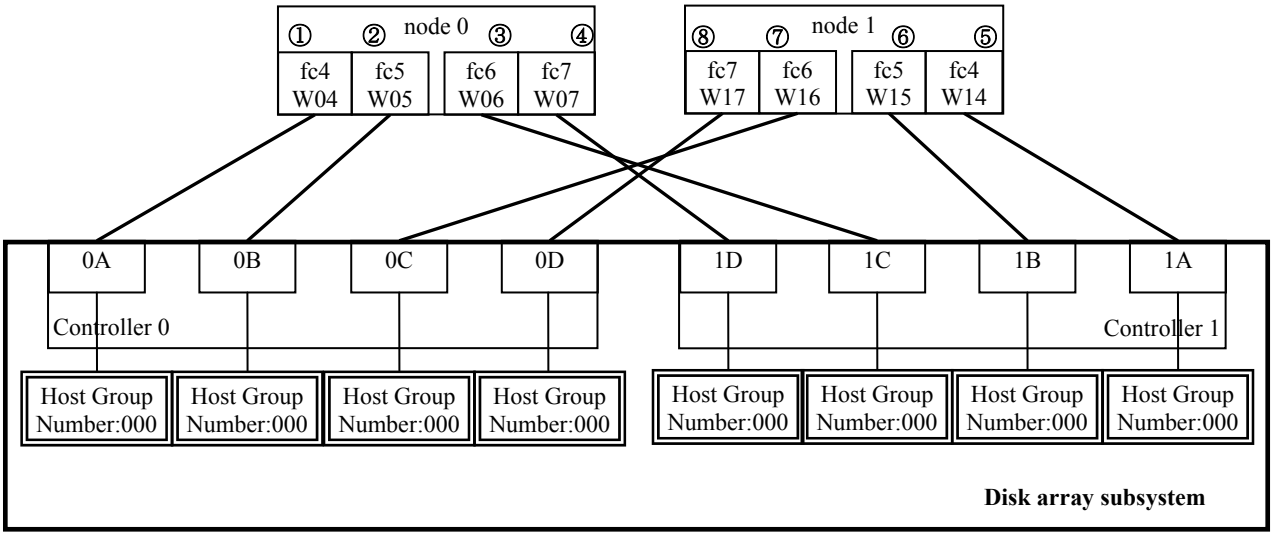

Figure 4.1.3-3 8 FC ports used, 2 HBAs and 8 ports in nodes, without switch

NOTE: If additional I/F board of FC are installed, consider 0B to be 0E and 1B to be 1E.

Table 4.1.3-4 Setting Example on Storage Side

HLUN	Port 0A	Port 0D	Port 0B	Port 0C	Port 1A	Port 1D	Port 1B	Port 1C
	HG#000	HG#000	HG#000	HG#000	HG#000	HG#000	HG#000	HG#000
	WWN:W02 ①	WWN:W17 ⑧	WWN:W03 ②	WWN:W16 ⑦	WWN:W12 ⑤	WWN:W07 ④	WWN:W13 ⑥	WWN:W06 ③
0	cluster management LU	User LU #255	User LU #255	cluster management LU	cluster management LU	User LU #255	User LU #255	cluster management LU
1	Command device 0	User LU #256	User LU #256	Command device 0	Command device 0	User LU #256	User LU #256	Command device 0
2	User LU #1	—	—	User LU #1	User LU #1	—	—	User LU #1
to	to	to	to	to	to	to	to	to
255	User LU #254	—	—	User LU #254	User LU #254	—	—	User LU #254

NOTE:
- User LUs are divided into two ports and mapped in this configuration. The HLUNs exceeding the number of LUs that the OS can recognize per port are to be mapped to a different port from the one to which HLUNs have been mapped.
- For the OS version 4.2.2-XX and later, refer to Disk Setting "Table 4.3-6 Comparison Tables of Setting Examples on Storage Side 5 (DSKST 04-0260)" and use appropriate values.
- Ensure HLUN0 is mapped to cluster management LU.
- Ensure the same HLUN is mapped to the same LU.
- Assign the WWN of the node which is recorded on the worksheet for memo of WWN (refer to "B.5.1 Acquiring WWNs of Nodes") to the host group on the side of the disk array subsystem.
- For convenience of drawing the figure, the FC ports in the node 1 are mirrored (left and right are reversed).
- This configuration is able to handle the User LU up to 256 LDEV.

Copyright © 2011, 2016, Hitachi, Ltd.

4.1.3.4 4(8) FC ports installed/2 ports used in disk array subsystem and 4 FC ports installed and used in nodes (with FC switches)

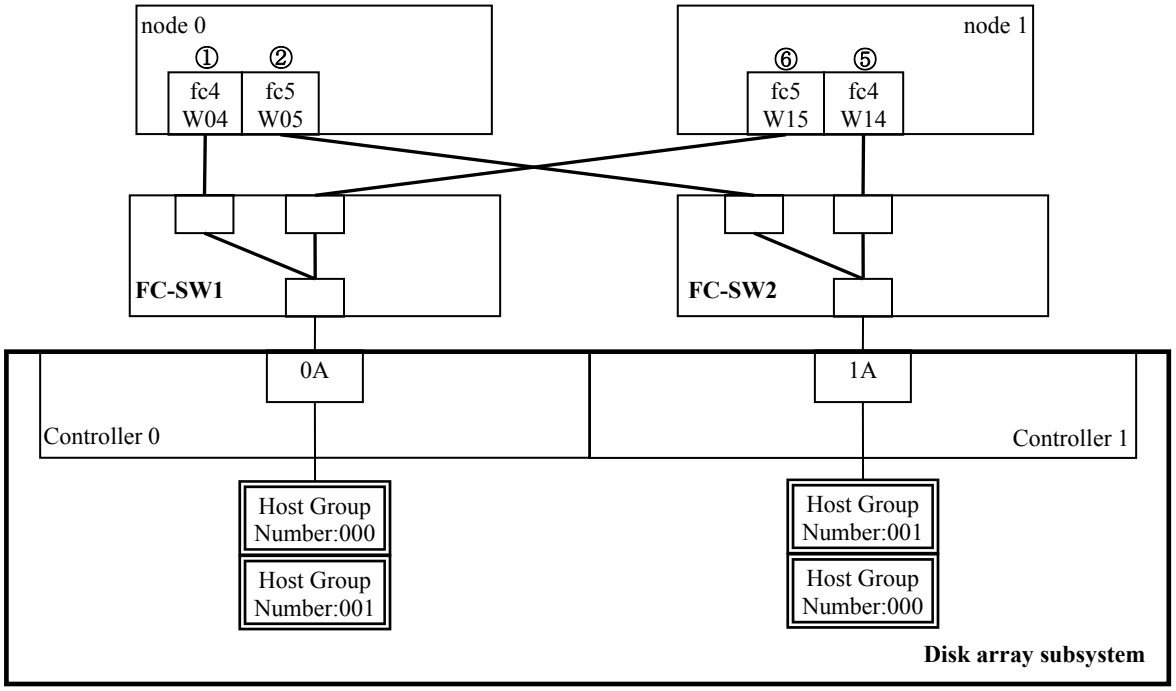

Figure 4.1.3-4 4 FC ports used, 1 HBA and 4 ports in nodes, with switches

NOTE:
- The FC ports 0B (0C, 0D) and 1B (1C, 1D) in the controllers are surpluses.
- For convenience of drawing the figure, the FC ports in the nodes are mirrored (left and right are reversed).

Copyright © 2011, 2012, Hitachi, Ltd.

Table 4.1.3-5 Setting Example on Storage Side

HLUN	Port 0A		Port 1A	
	HG#000	HG#001	HG#001	HG#000
	① WWN:W04	⑥ WWN:W15	⑤ WWN:W15	② WWN:W04
0	cluster management LU	cluster management LU	cluster management LU	cluster management LU
1	Command device 0	Command device 0	Command device 0	Command device 0
2	User LU #1	User LU #1	User LU #1	User LU #1
to	to	to	to	to
255	User LU #254	User LU #254	User LU #254	User LU #254

NOTE:
- For the OS version 4.2.2-XX and later, refer to Disk Setting "Table 4.3-5 Comparison Tables of Setting Examples on Storage Side 4 (DSKST 04-0250)" and use appropriate values.
- Ensure HLUN0 is mapped to cluster management LU.
- Ensure the same HLUN is mapped to the same LU.
- Assign the WWN of the node which is recorded on the worksheet for memo of WWN (refer to "B.5.1 Acquiring WWNs of Nodes") to the host group on the side of the disk array subsystem.
- This configuration can handle up to 254 user LUs.
  However, up to 255 LUs can be handled in the configuration of HDI for Cloud because no command device is used.
- For convenience of drawing the figure, the FC ports in the node 1 are mirrored (left and right are reversed).
- Zoning for the FC-SW must be performed. Group zoning in the setting of zoning cannot be used. Ask the system administrator to perform port zoning.

Copyright © 2011, 2016, Hitachi, Ltd.

4.1.3.5 4(8) FC ports installed/2 ports used in disk array subsystem and 8 FC ports installed and 4 ports used in nodes (with FC switches)

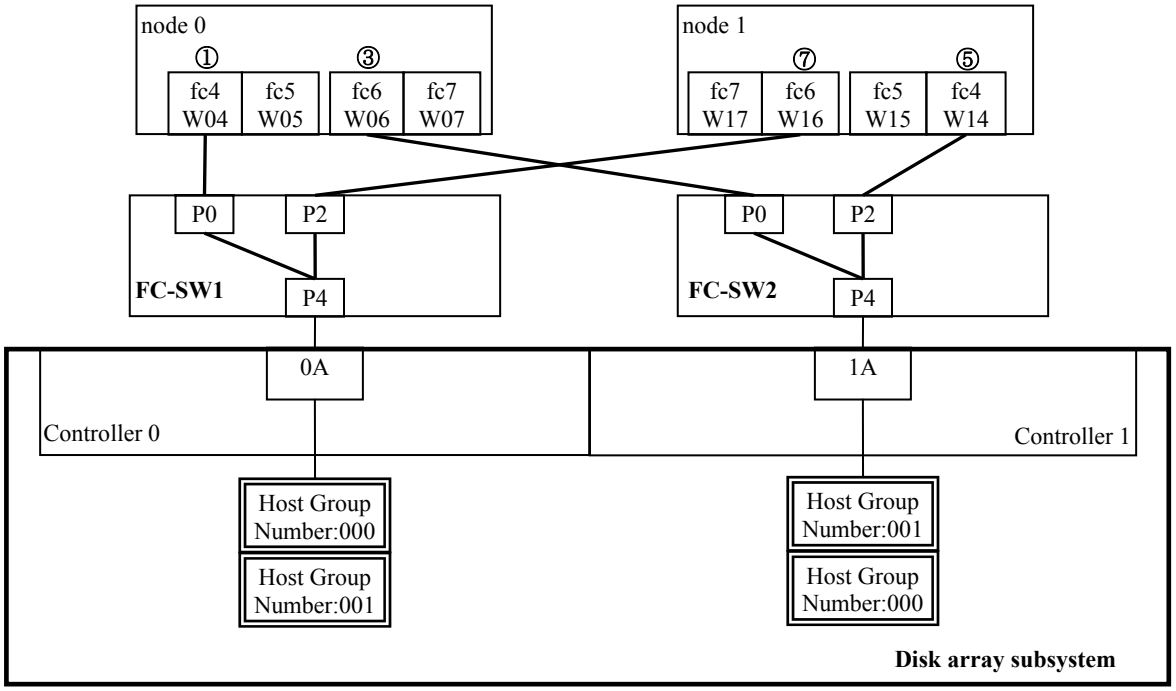

Figure 4.1.3-5 2 FC ports used, 2 HBAs and 4 ports in nodes, with switches

NOTE:
- The FC ports 0B (0C, 0D) and 1B (1C, 1D) in the controllers are surpluses.
- For convenience of drawing the figure, the FC ports in the nodes are mirrored (left and right are reversed).

Copyright © 2011, 2012, Hitachi, Ltd.

Table 4.1.3-6 Setting Example on Storage Side

HLUN	Port 0A		Port 1A	
	HG#000	HG#001	HG#001	HG#000
	① WWN:W04	⑦ WWN:W16	⑤ WWN:W14	③ WWN:W06
0	cluster management LU	cluster management LU	cluster management LU	cluster management LU
1	Command device 0	Command device 0	Command device 0	Command device 0
2	User LU #1	User LU #1	User LU #1	User LU #1
to	to	to	to	to
255	User LU #254	User LU #254	User LU #254	User LU #254

NOTE:
- For the OS version 4.2.2-XX and later, refer to Disk Setting "Table 4.3-5 Comparison Tables of Setting Examples on Storage Side 4 (DSKST 04-0250)" and use appropriate values.
- Ensure HLUN0 is mapped to cluster management LU.
- Ensure the same HLUN is mapped to the same LU.
- Assign the WWN of the node which is recorded on the worksheet for memo of WWN (refer to "B.5.1 Acquiring WWNs of Nodes") to the host group on the side of the disk array subsystem.
- This configuration can handle up to 254 user LUs.
  However, up to 255 LUs can be handled in the configuration of HDI for Cloud because no command device is used.
- For convenience of drawing the figure, the FC ports in the node 1 are mirrored (left and right are reversed).
- Zoning for the FC-SW must be performed. Group zoning in the setting of zoning cannot be used. Ask the system administrator to perform port zoning.

Copyright © 2011, 2016, Hitachi, Ltd.

4.1.3.6 This Page is Intentionally Blanked

Copyright © 2011, Hitachi, Ltd.

4.1.3.7 4(8,16) FC ports installed/4 ports used in disk array subsystem and 4 FC ports installed/used in nodes (with FC switches)

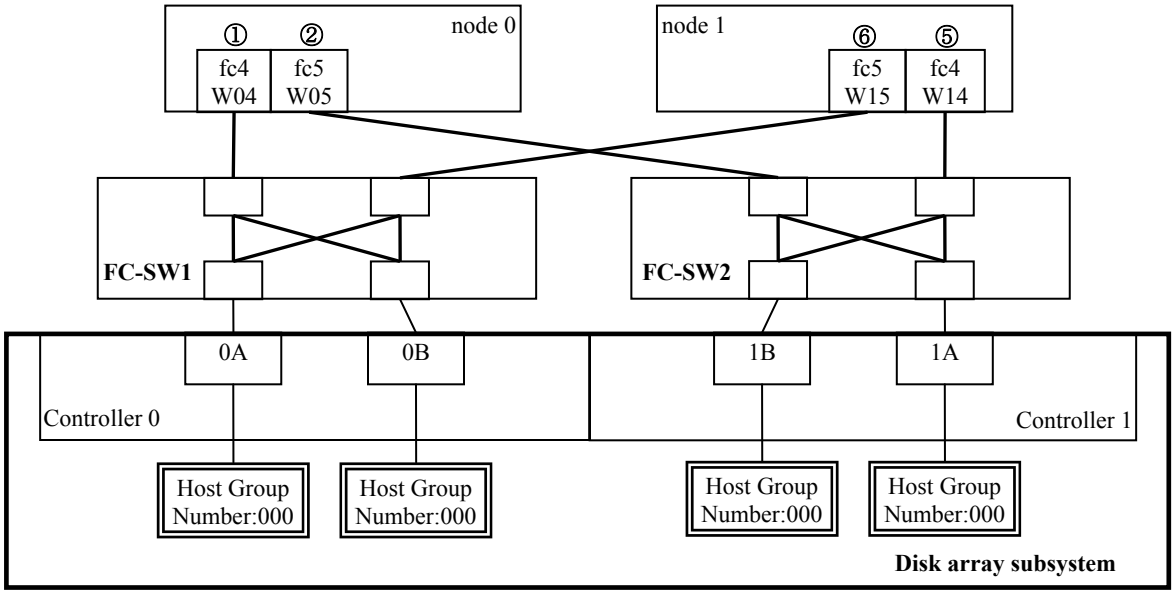

Figure 4.1.3-7 4 FC ports used, 1 HBA and 4 ports in nodes, with switches

NOTE: If additional I/F board of FC are installed, consider 0B to be 0E and 1B to be 1E.

Copyright © 2011, 2012, Hitachi, Ltd.

Table 4.1.3-7 Setting Example on Storage Side

HLUN	Port 0A	Port 0B	Port 1A	Port 1B
	HG#000	HG#000	HG#000	HG#000
	①,⑥ WWN:W04,W15	①,⑥ WWN:W04,W15	②,⑤ WWN:W05,W14	②,⑤ WWN:W05,W14
0	cluster management LU	User LU #129	cluster management LU	User LU #129
1	Command device 0	User LU #130	Command device 0	User LU #130
2	User LU #1	User LU #131	User LU #1	User LU #131
to	to	to	to	to
127	User LU #126	User LU #256	User LU #126	User LU #256
to	to	to	to	to
129	User LU #128	—	User LU #128	—
to	to	to	to	to
255	—	—	—	—

NOTE:
- For the OS version 4.2.2-XX and later, refer to Disk Setting "Table 4.3-4 Comparison Tables of Setting Examples on Storage Side 3 (DSKST 04-0240)" and use appropriate values.
- Ensure HLUN0 is mapped to cluster management LU.
- Ensure the same HLUN is mapped to the same LU.
- WWN of the node which is recorded on the worksheet for memo of WWN (refer to "B.5.1 Acquiring WWNs of Nodes") to the host group on the side of the disk array subsystem.
- For convenience of drawing the figure, the FC ports in the node 1 are mirrored (left and right are reversed).
- This configuration is able to handle the User LU up to 256 LDEV.
- Zoning for the FC-SW must be performed. Group zoning in the setting of zoning cannot be used. Ask the system administrator to perform port zoning.

Copyright © 2011, 2016, Hitachi, Ltd.

4.1.3.8 4(8,16) FC ports installed/4 ports used in disk array subsystem and 8 FC ports installed/4 ports used in nodes (with FC switches)

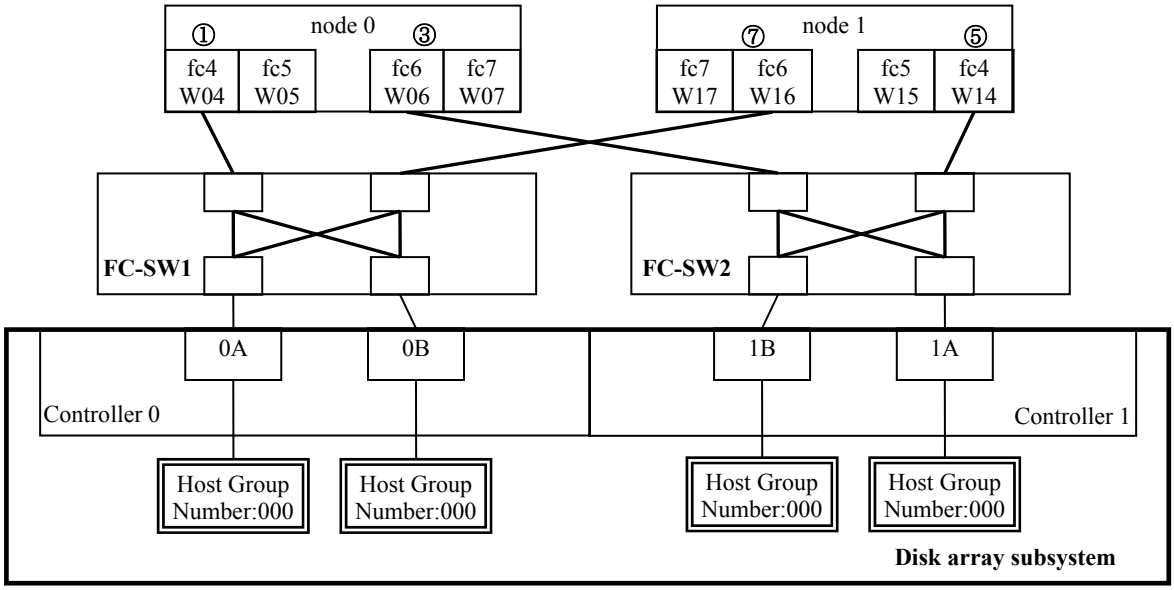

Figure 4.1.3-8 4 FC ports used, 2HBAs and 4 ports in nodes, with switches

NOTE: If additional I/F board of FC are installed, consider 0B to be 0E and 1B to be 1E.

Copyright © 2011, 2012, Hitachi, Ltd.

Table 4.1.3-8 Setting Example on Storage Side

HLUN	Port 0A	Port 0B	Port 1A	Port 1B
	HG#000	HG#000	HG#000	HG#000
	①,⑦ WWN:W04,W16	①,⑦ WWN:W04,W16	③,⑤ WWN:W06,W14	③,⑤ WWN:W06,W14
0	cluster management LU	User LU #129	cluster management LU	User LU #129
1	Command device 0	User LU #130	Command device 0	User LU #130
2	User LU #1	User LU #131	User LU #1	User LU #131
to	to	to	to	to
127	User LU #126	User LU #256	User LU #126	User LU #256
to	to	to	to	to
129	User LU #128	—	User LU #128	—
to	to	to	to	to
255	—	—	—	—

NOTE:
- For the OS version 4.2.2-XX and later, refer to Disk Setting "Table 4.3-4 Comparison Tables of Setting Examples on Storage Side 3 (DSKST 04-0240)" and use appropriate values.
- Ensure HLUN0 is mapped to cluster management LU.
- Ensure the same HLUN is mapped to the same LU.
- WWN of the node which is recorded on the worksheet for memo of WWN (refer to "B.5.1 Acquiring WWNs of Nodes") to the host group on the side of the disk array subsystem.
- For convenience of drawing the figure, the FC ports in the node 1 are mirrored (left and right are reversed).
- This configuration is able to handle the User LU up to 256 LDEV.
- Zoning for the FC-SW must be performed. Group zoning in the setting of zoning cannot be used. Ask the system administrator to perform port zoning.

Copyright © 2011, 2016, Hitachi, Ltd.

4.1.3.9 4(8,16) FC ports installed/4 ports used in disk array subsystem and 8 FC ports installed/used in nodes (with FC switches)

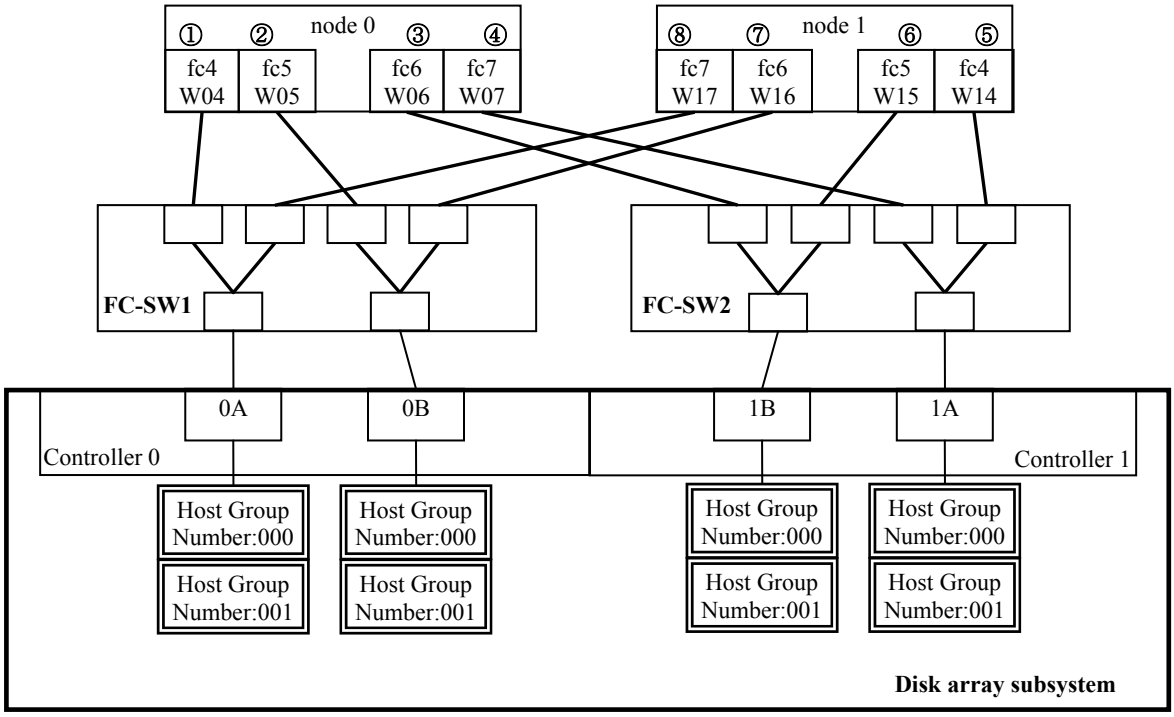

Figure 4.1.3-9 4 FC ports used, 2 HBAs and 8 ports in nodes, with switches

NOTE: If additional I/F board of FC are installed, consider 0B to be 0E and 1B to be 1E.

Copyright © 2011, 2012, Hitachi, Ltd.

Table 4.1.3-9 Setting Example on Storage Side

HLUN	Port 0A		Port 0B		Port 1A		Port 1B	
	HG#000	HG#001	HG#000	HG#001	HG#000	HG#001	HG#000	HG#001
	WWN:W04 ①	WWN:W17 ⑧	WWN:W16 ⑦	WWN:W05 ②	WWN:W14 ⑤	WWN:W07 ④	WWN:W06 ③	WWN:W15 ⑥
0	cluster management LU	User LU #129	cluster management LU	User LU #129	cluster management LU	User LU #129	cluster management LU	User LU #129
1	Command device 0	User LU #130	Command device 0	User LU #130	Command device 0	User LU #130	Command device 0	User LU #130
2	User LU #1	User LU #131	User LU #1	User LU #131	User LU #1	User LU #131	User LU #1	User LU #131
to	to	to	to	to	to	to	to	to
127	User LU #126	User LU #256	User LU #126	User LU #256	User LU #126	User LU #256	User LU #126	User LU #256
to	to	to	to	to	to	to	to	to
129	User LU #128	—	User LU #128	—	User LU #128	—	User LU #128	—
to	to	to	to	to	to	to	to	to
255	—	—	—	—	—	—	—	—

NOTE:
- For the OS version 4.2.2-XX and later, refer to Disk Setting "Table 4.3-4 Comparison Tables of Setting Examples on Storage Side 3 (DSKST 04-0240)" and use appropriate values.
- Ensure HLUN0 is mapped to cluster management LU.
- Ensure the same HLUN is mapped to the same LU.
- WWN of the node which is recorded on the worksheet for memo of WWN (refer to "B.5.1 Acquiring WWNs of Nodes") to the host group on the side of the disk array subsystem.
- For convenience of drawing the figure, the FC ports in the node 1 are mirrored (left and right are reversed).
- This configuration is able to handle the User LU up to 256 LDEV.
- Zoning for the FC-SW must be performed. Group zoning in the setting of zoning cannot be used. Ask the system administrator to perform port zoning.

Copyright © 2011, 2016, Hitachi, Ltd.

4.1.3.10 16 FC ports installed/8 ports used in disk array subsystem and 8 FC ports installed/used in nodes (without FC switch)

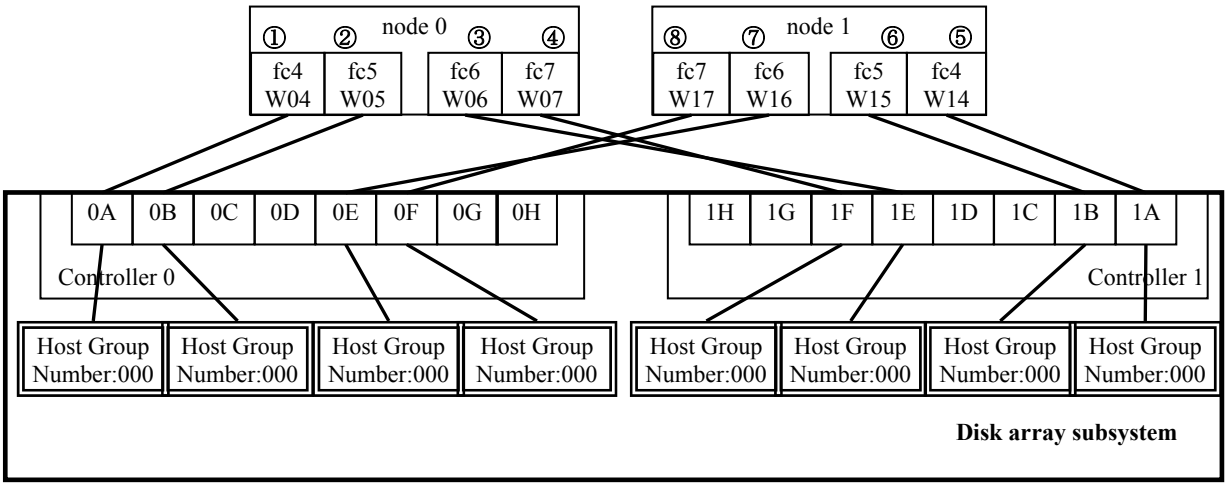

Figure 4.1.3-10 8 FC ports used, 2 HBAs and 8 ports in nodes, without switch

Table 4.1.3-10 Setting Example on Storage Side

HLUN	Port 0A	Port 0F	Port 0B	Port 0E	Port 1A	Port 1F	Port 1B	Port 1E
	HG#000	HG#000	HG#000	HG#000	HG#000	HG#000	HG#000	HG#000
	WWN:W02 ①	WWN:W17 ⑧	WWN:W03 ②	WWN:W16 ⑦	WWN:W12 ⑤	WWN:W07 ④	WWN:W13 ⑥	WWN:W06 ③
0	cluster management LU	User LU #129	User LU #129	cluster management LU	cluster management LU	User LU #129	User LU #129	cluster management LU
1	Command device 0	User LU #130	User LU #130	Command device 0	Command device 0	User LU #130	User LU #130	Command device 0
2	User LU #1	User LU #131	User LU #131	User LU #1	User LU #1	User LU #131	User LU #131	User LU #1
to	to	to	to	to	to	to	to	to
127	User LU #126	User LU #256	User LU #126	User LU #256	User LU #126	User LU #256	User LU #126	User LU #256
to	to	to	to	to	to	to	to	to
129	User LU #128	—	User LU #128	—	User LU #128	—	User LU #128	—
to	to	to	to	to	to	to	to	to
255	—	—	—	—	—	—	—	—

NOTE:
- For the OS version 4.2.2-XX and later, refer to Disk Setting "Table 4.3-4 Comparison Tables of Setting Examples on Storage Side 3 (DSKST 04-0240)" and use appropriate values.
- Ensure HLUN0 is mapped to cluster management LU.
- Ensure the same HLUN is mapped to the same LU.
- WWN of the node which is recorded on the worksheet for memo of WWN (refer to "B.5.1 Acquiring WWNs of Nodes") to the host group on the side of the disk array subsystem.
- For convenience of drawing the figure, the FC ports in the node 1 are mirrored (left and right are reversed).
- This configuration is able to handle the User LU up to 256 LDEV.

Copyright © 2011, 2016, Hitachi, Ltd.

4.1.3.11 8(16) FC ports installed/8 ports used in disk array subsystem and 8 FC ports installed/used in nodes (with FC switches)

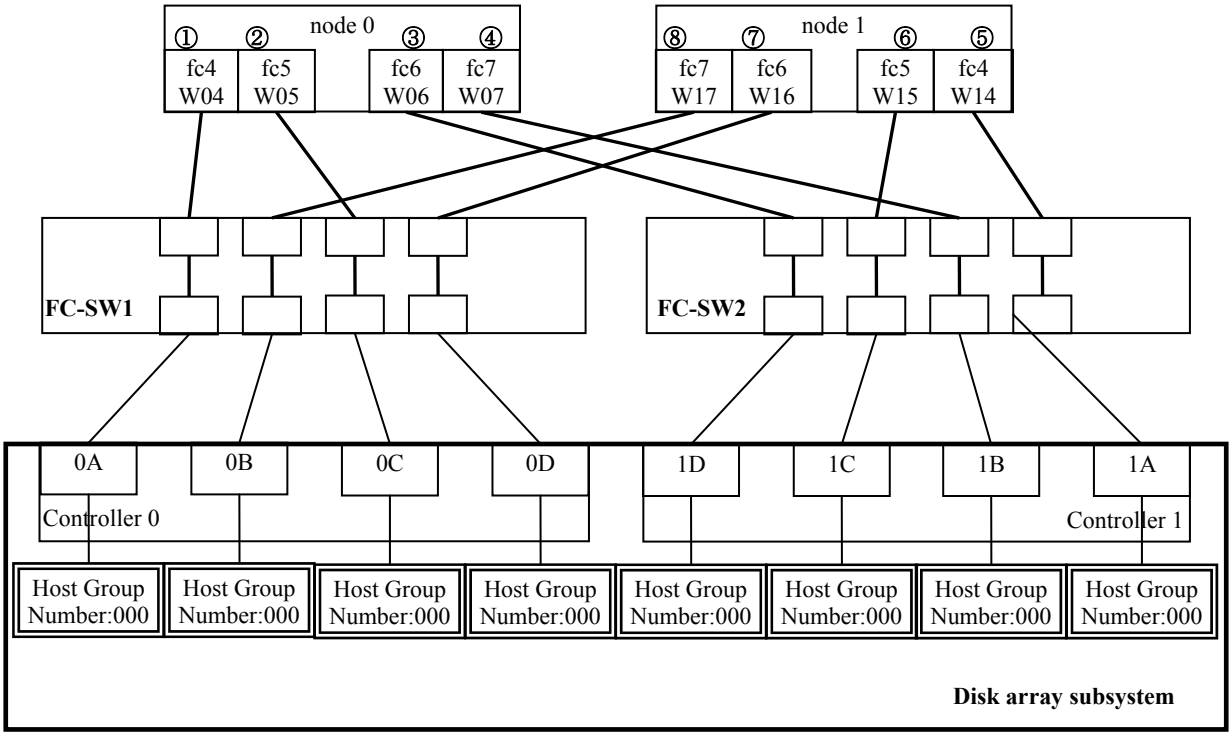

Figure 4.1.3-11 8 FC ports used, 2 HBAs and 8 ports in nodes, with switches

NOTE: If additional I/F board of FC are installed, consider 0C to be 0E, 0D to be 0F, 1C to be 1E, and 1D to be 1F.

Copyright © 2011, 2012, Hitachi, Ltd.

Table 4.1.3-11 Setting Example on Storage Side

HLUN	Port 0A	Port 0B	Port 0C	Port 0D	Port 1D	Port 1C	Port 1B	Port 1A
	HG#000	HG#000	HG#000	HG#000	HG#000	HG#000	HG#000	HG#000
	WWN:W04 ①	WWN:W17 ⑧	WWN:W05 ②	WWN:W16 ⑦	WWN:W06 ③	WWN:W15 ⑥	WWN:W07 ④	WWN:W14 ⑤
0	cluster management LU	User LU #129	User LU #129	cluster management LU	cluster management LU	User LU #129	User LU #129	cluster management LU
1	Command device 0	User LU #130	User LU #130	Command device 0	Command device 0	User LU #130	User LU #130	Command device 0
2	User LU #1	User LU #131	User LU #131	User LU #1	User LU #1	User LU #131	User LU #131	User LU #1
to	to	to	to	to	to	to	to	to
127	User LU #126	User LU #256	User LU #126	User LU #256	User LU #126	User LU #256	User LU #126	User LU #256
to	to	to	to	to	to	to	to	to
129	User LU #128	—	User LU #128	—	User LU #128	—	User LU #128	—
to	to	to	to	to	to	to	to	to
255	—	—	—	—	—	—	—	—

NOTE:
- For the OS version 4.2.2-XX and later, refer to Disk Setting "Table 4.3-4 Comparison Tables of Setting Examples on Storage Side 3 (DSKST 04-0240)" and use appropriate values.
- Ensure HLUN0 is mapped to cluster management LU.
- Ensure the same HLUN is mapped to the same LU.
- WWN of the node which is recorded on the worksheet for memo of WWN (refer to "B.5.1 Acquiring WWNs of Nodes") to the host group on the side of the disk array subsystem.
- For convenience of drawing the figure, the FC ports in the node 1 are mirrored (left and right are reversed).
- This configuration is able to handle the User LU up to 256 LDEV.
- Zoning for the FC-SW must be performed. Group zoning in the setting of zoning cannot be used. Ask the system administrator to perform port zoning.

Copyright © 2011, 2016, Hitachi, Ltd.

4.1.3.12 8(16) FC ports installed/8 ports used in disk array subsystem and 4 FC ports installed/used in nodes (with FC switches)

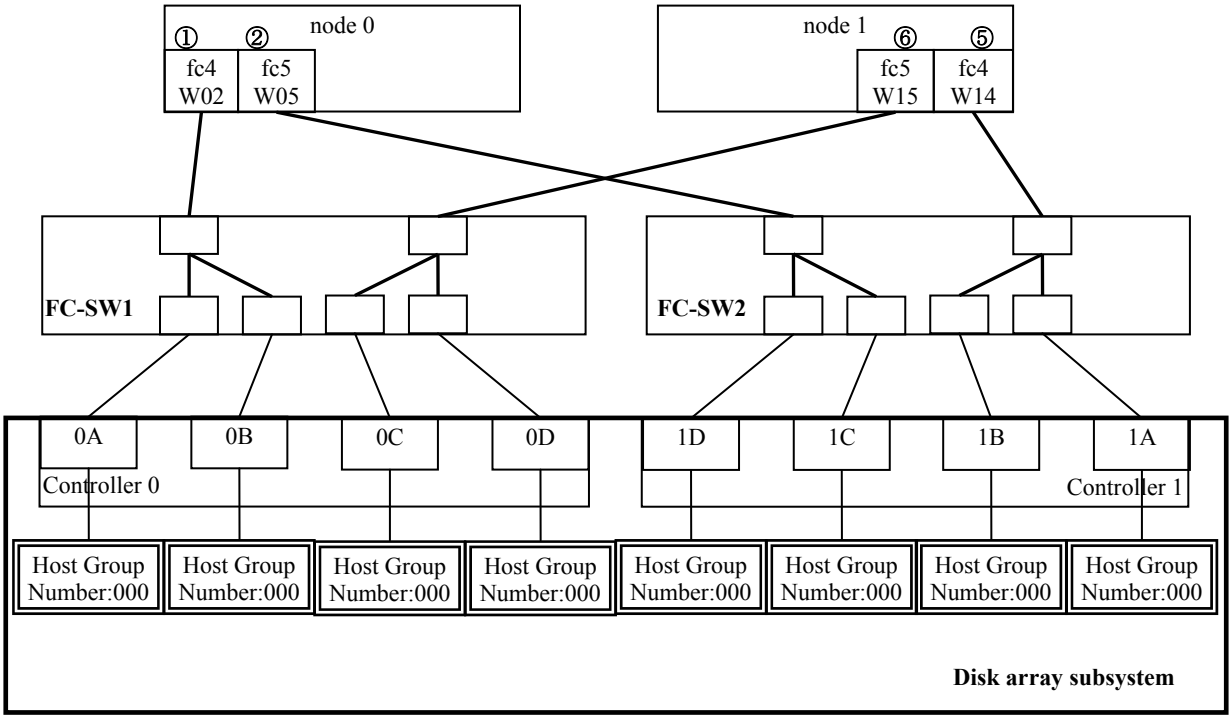

Figure 4.1.3-12 8 FC ports used, 1 HBA and 4 ports in nodes, with switches

NOTE: If additional I/F board of FC are installed, consider 0C to be 0E, 0D to be 0F, 1C to be 1E, and 1D to be 1F.

Copyright © 2011, 2012, Hitachi, Ltd.

Table 4.1.3-12 Setting Example on Storage Side

HLUN	Port 0A	Port 0B	Port 0C	Port 0D	Port 1D	Port 1C	Port 1B	Port 1A
	HG#000	HG#000	HG#000	HG#000	HG#000	HG#000	HG#000	HG#000
	WWN:W04 ①	WWN:W04 ①	WWN:W15 ⑥	WWN:W15 ⑥	WWN:W05 ②	WWN:W05 ②	WWN:W15 ⑤	WWN:W15 ⑤
0	cluster management LU	User LU #129	User LU #129	cluster management LU	cluster management LU	User LU #129	User LU #129	cluster management LU
1	Command device 0	User LU #130	User LU #130	Command device 0	Command device 0	User LU #130	User LU #130	Command device 0
2	User LU #1	User LU #131	User LU #131	User LU #1	User LU #1	User LU #131	User LU #131	User LU #1
to	to	to	to	to	to	to	to	to
127	User LU #126	User LU #256	User LU #126	User LU #256	User LU #126	User LU #256	User LU #126	User LU #256
to	to	to	to	to	to	to	to	to
129	User LU #128	—	User LU #128	—	User LU #128	—	User LU #128	—
to	to	to	to	to	to	to	to	to
255	—	—	—	—	—	—	—	—

NOTE:
- For the OS version 4.2.2-XX and later, refer to Disk Setting "Table 4.3-4 Comparison Tables of Setting Examples on Storage Side 3 (DSKST 04-0240)" and use appropriate values.
- Ensure HLUN0 is mapped to cluster management LU.
- Ensure the same HLUN is mapped to the same LU.
- WWN of the node which is recorded on the worksheet for memo of WWN (refer to "B.5.1 Acquiring WWNs of Nodes") to the host group on the side of the disk array subsystem.
- For convenience of drawing the figure, the FC ports in the node 1 are mirrored (left and right are reversed).
- This configuration is able to handle the User LU up to 256 LDEV.
- Zoning for the FC-SW must be performed. Group zoning in the setting of zoning cannot be used. Ask the system administrator to perform port zoning.

Copyright © 2011, 2016, Hitachi, Ltd.

4.1.3.13 8(16) FC ports installed/8 ports used in disk array subsystem and 8 FC ports installed/4 ports used in nodes (with FC switches)

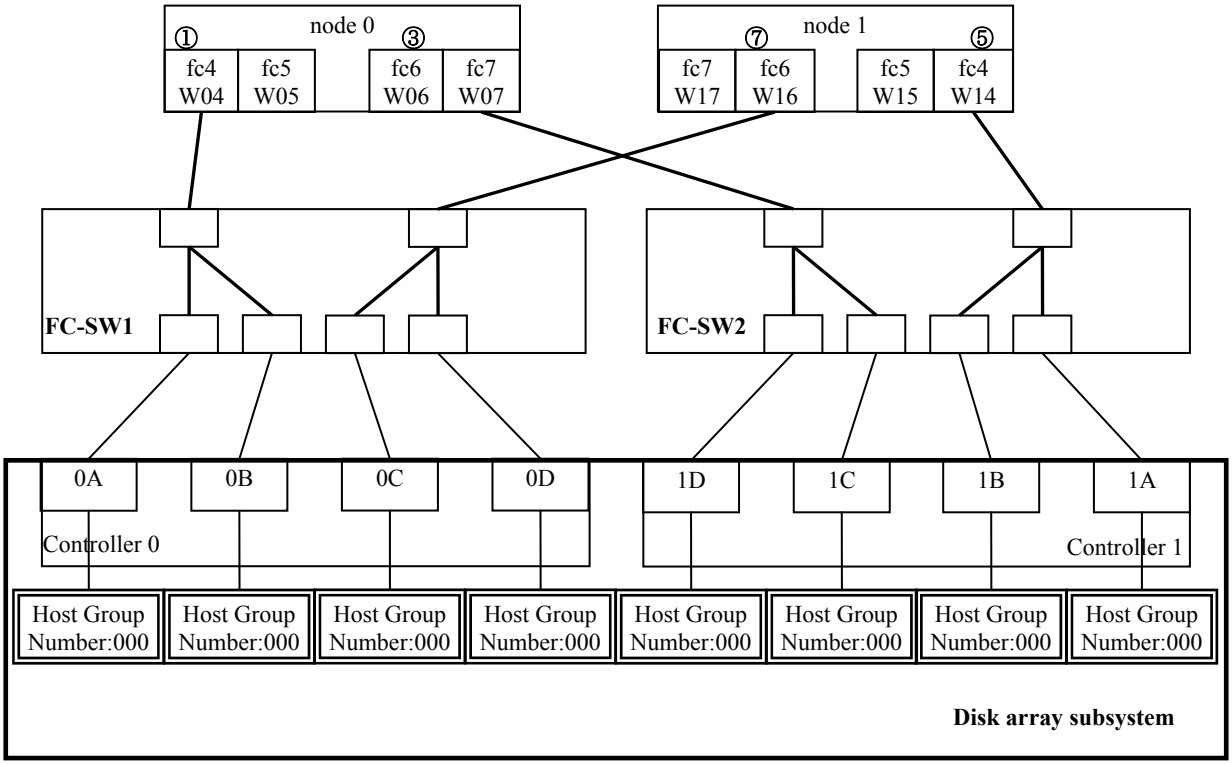

Figure 4.1.3-13 8 FC ports used, 2 HBAs and 4 ports in nodes, with switches

NOTE: If additional I/F board of FC are installed, consider 0C to be 0E, 0D to be 0F, 1C to be 1E, and 1D to be 1F.

Copyright © 2011, 2012, Hitachi, Ltd.

Table 4.1.3-13 Setting Example on Storage Side

HLUN	Port 0A	Port 0B	Port 0C	Port 0D	Port 1D	Port 1C	Port 1B	Port 1A
	HG#000	HG#000	HG#000	HG#000	HG#000	HG#000	HG#000	HG#000
	WWN:W04 ①	WWN:W04 ①	WWN:W16 ⑦	WWN:W16 ⑦	WWN:W06 ③	WWN:W06 ③	WWN:W14 ⑤	WWN:W14 ⑤
0	cluster management LU	User LU #129	User LU #129	cluster management LU	cluster management LU	User LU #129	User LU #129	cluster management LU
1	Command device 0	User LU #130	User LU #130	Command device 0	Command device 0	User LU #130	User LU #130	Command device 0
2	User LU #1	User LU #131	User LU #131	User LU #1	User LU #1	User LU #131	User LU #131	User LU #1
to	to	to	to	to	to	to	to	to
127	User LU #126	User LU #256	User LU #126	User LU #256	User LU #126	User LU #256	User LU #126	User LU #256
to	to	to	to	to	to	to	to	to
129	User LU #128	—	User LU #128	—	User LU #128	—	User LU #128	—
to	to	to	to	to	to	to	to	to
255	—	—	—	—	—	—	—	—

NOTE:
- For the OS version 4.2.2-XX and later, refer to Disk Setting "Table 4.3-4 Comparison Tables of Setting Examples on Storage Side 3 (DSKST 04-0240)" and use appropriate values.
- Ensure HLUN0 is mapped to cluster management LU.
- Ensure the same HLUN is mapped to the same LU.
- WWN of the node which is recorded on the worksheet for memo of WWN (refer to "B.5.1 Acquiring WWNs of Nodes") to the host group on the side of the disk array subsystem.
- For convenience of drawing the figure, the FC ports in the node 1 are mirrored (left and right are reversed).
- This configuration is able to handle the User LU up to 256 LDEV.
- Zoning for the FC-SW must be performed. Group zoning in the setting of zoning cannot be used. Ask the system administrator to perform port zoning.

Copyright © 2011, 2016, Hitachi, Ltd.

4.2 Setting Example of USP V, USP VM, VSP, VSP G1000, VSP Gx00/VSP Fx00, and HUS VM

It shows the disk array subsystem connection patterns.

USP V, USP VM, VSP, VSP G1000, VSP Gx00/VSP Fx00, and HUS VM support the configuration of HDI for HCP, the configuration of HDI for Cloud.

Table 4.2-1 shows the notations used in the following figures of setting examples.

Table 4.2-1 Notations

No.	Notation in figure	Description	Remarks
1	fc4	FC port 4 installed in the expansion slot 3 of each node	(*1)
2	fc5	FC port 5 installed in the expansion slot 3 of each node	(*1)
3	fc6	FC port 6 installed in the expansion slot 4 of each node	(*1)
4	fc7	FC port 7 installed in the expansion slot 4 of each node	(*1)
5	Wxx	WWN of the FC port of the expansion slot 3	—

*1: The case where the port numbers of the FC port are fc4 to fc7 is an example in this chapter. However, as the port numbers of the FC port are different depending on the target model, refer to "A.2.2.2 Port arrangement and port names" for details.

Copyright © 2010, 2016, Hitachi, Ltd.

4.2.1 The configuration of HDI for HCP

4.2.1.1 Using two FC ports of USP V, USP VM, VSP, VSP G1000, VSP Gx00/VSP Fx00, or HUS VM with one HBA on a node, 4 ports in a cluster, and switches

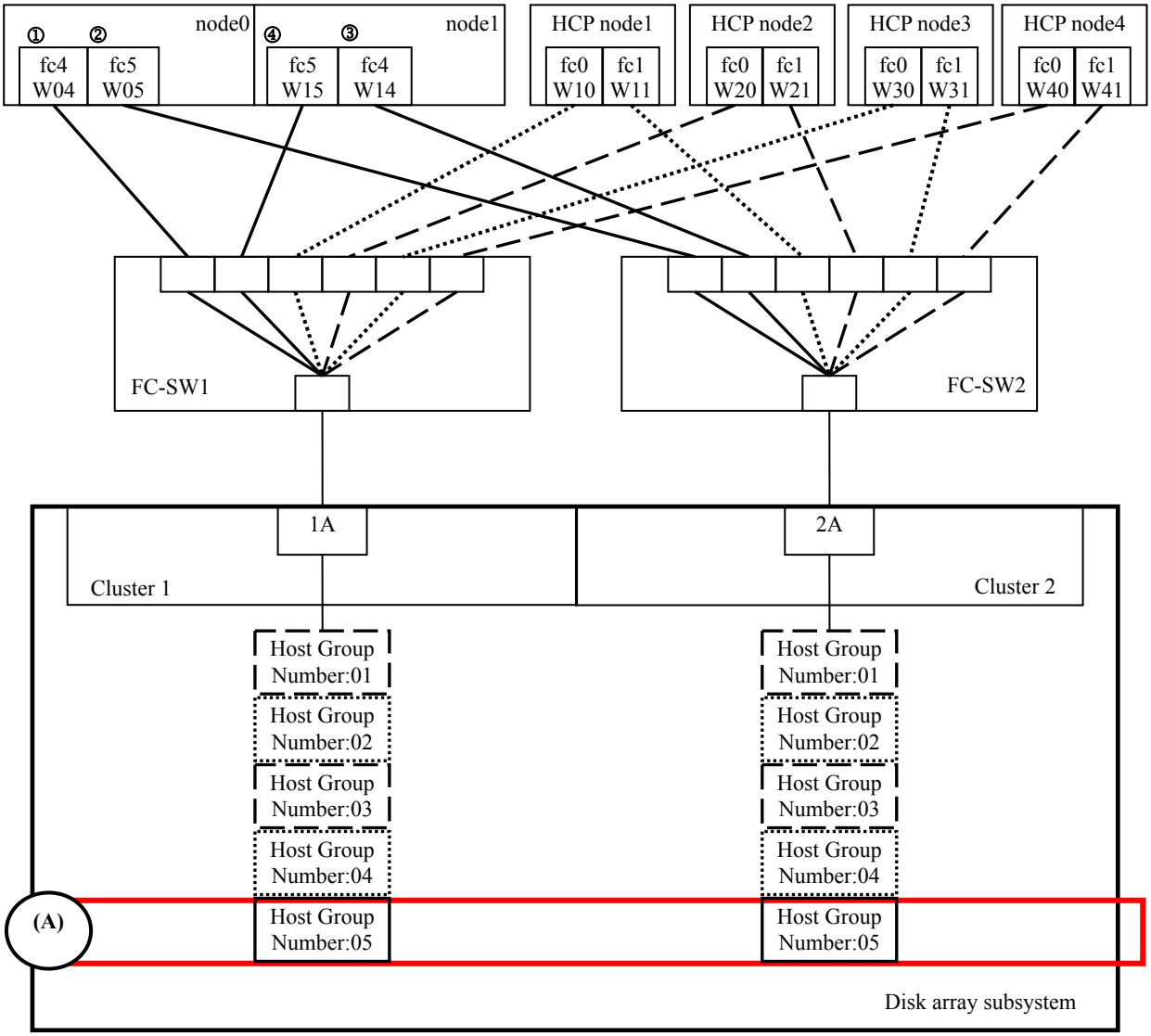

Figure 4.2.1-1 Using two FC ports of USP V, USP VM, VSP, VSP G1000, VSP Gx00/VSP Fx00, or HUS VM with one HBA on a node, 4 ports in a cluster, and switches

The Host Group of (A) (Host Group number 05) should be the host group that maps the LU of Hitachi Data Ingestor.
For Hitachi Data Ingestor, use a host group number which is not used for HCP.

NOTE:
- The FC-SW zoning is necessary.
  Request the system administrator to execute WWN zoning for the setting of zoning.
  Note that group zoning cannot be used.
- Do not map the LU (cluster management LU, User LU) to be used in the Hitachi Data Ingestor under the Host Group to be used for HCP.

Copyright © 2010, 2016, Hitachi, Ltd.

Table 4.2.1-1 Setting Example on Storage Side

LUN	Port 1A				①,④	Port 2A				②,③
	HG#01	HG#02	HG#03	HG#04	HG#05	HG#01	HG#02	HG#03	HG#04	HG#05
	WWN:W10	WWN:W20	WWN:W30	WWN:W40	WWN:W04 WWN:W15	WWN:W31	WWN:W41	WWN:W11	WWN:W21	WWN:W05 WWN:W14
0	HCP OS LU #1	HCP OS LU #2	HCP OS LU #3	HCP OS LU #4	cluster management LU	HCP OS LU #3	HCP OS LU #4	HCP OS LU #1	HCP OS LU #2	cluster management LU
1	HCP DATA LU #1	HCP DATA LU #2	HCP DATA LU #3	HCP DATA LU #4	User LU #0	HCP DATA LU #3	HCP DATA LU #4	HCP DATA LU #1	HCP DATA LU #2	User LU #0
2	HCP DATA LU #5	HCP DATA LU #6	HCP DATA LU #7	HCP DATA LU #8	User LU #1	HCP DATA LU #7	HCP DATA LU #8	HCP DATA LU #5	HCP DATA LU #6	User LU #1
to	to	to	to	to	User LU #2	to	to	to	to	User LU #2
128	to	to	to	to	to	to	to	to	to	to
129	HCP DATA LU #2	HCP DATA LU #1	HCP DATA LU #4	HCP DATA LU #3	User LU #128	HCP DATA LU #4	HCP DATA LU #3	HCP DATA LU #2	HCP DATA LU #1	User LU #128
130	HCP DATA LU #6	HCP DATA LU #5	HCP DATA LU #8	HCP DATA LU #7	User LU #129	HCP DATA LU #8	HCP DATA LU #7	HCP DATA LU #6	HCP DATA LU #5	User LU #129
to	to	to	to	to	to	to	to	to	to	to
254	—	—	—	—	User LU #252	—	—	—	—	User LU #252
255	—	—	—	—	User LU #254	—	—	—	—	User LU #254

NOTE:
- For the OS version 4.2.2-XX and later, refer to Disk Setting "Table 4.3-2 Comparison Tables of Setting Examples on Storage Side 1 (DSKST 04-0210)" and use appropriate values.
- Ensure HLUN0 is mapped to cluster management LU.
- For the mapping to be used in the Hitachi Data Ingestor, be sure to map the same LDEV to the same LUN as shown in the sections enclosed by the bold lines in Table 4.2.1-1.
- Allocate the WWN of node that is taken a note in the worksheet for memo of WWN (refer to "B.5.1 Acquiring WWNs of Nodes") to the host group on the side of disk array subsystem.
- This configuration is able to handle the User LU up to 255LDEV.
- Note that the FC port of node1 is mirrored (left and right are reversed) to the actual arrangement.
- The configuration of Data LU in HCP and the configuration of User LU in HDI show the maximum configuration.

Copyright © 2010, 2016, Hitachi, Ltd.

```
Emulex Light Pulse BIOS Utility, ZB2.02a2
Copyright (c) 1997-2007 Emulex. All rights reserved.

Emulex Adapters in the System:

1. LPe11002-M4:    PCI Bus, Device, Function (02, 00, 00)  ①
2. LPe11002-M4:    PCI Bus, Device, Function (02, 00, 01)  ②



Enter a Selection:    1

Enter <x> to Exit
```

Figure 4.2.1-2 Emulex Utility Port window of node0 (example)

```
Emulex Light Pulse BIOS Utility, ZB2.02a2
Copyright (c) 1997-2007 Emulex. All rights reserved.

Emulex Adapters in the System:

1. LPe11002-M4:    PCI Bus, Device, Function (02, 00, 00)  ③
2. LPe11002-M4:    PCI Bus, Device, Function (02, 00, 01)  ④



Enter a Selection:    1

Enter <x> to Exit
```

Figure 4.2.1-3 Emulex Utility Port window of node1 (example)

Table 4.2.1-2 Worksheet for Memo of WWN

	PCI Bus, Device, Function (02, 00, 00)	PCI Bus, Device, Function (02, 00, 01)
node0	①	②
node1	③	④

Copyright © 2010, Hitachi, Ltd.

4.2.2 The configuration of HDI for Cloud

Table 4.2.2-1 shows the disk array subsystem connection patterns.

Refer to the relevant number of figure depending on “Model type connected to Hitachi Data Ingestor”, “Number of disk array subsystem ports to be used” and “Number of node ports to be used”.

At this step, input “LUN” in the table in hexadecimal notation.

Table 4.2.2-1 Disk Array Subsystem Connection Pattern

No.	Model name	Type	Number of disk array subsystem ports to be used (*1)	FC-SW not existing			FC-SW existing (*6)		
				Number of node ports to be used (*1)			Number of node ports to be used (*1)		
				4/4 (One FC card)(*6)	4/8 (Two FC card)(*6)	8/8 (Two FC card)	4/4 (One FC card)	4/8 (Two FC card)	8/8 (Two FC card)
1	USP V/VM, VSP, VSP G1000, VSP Gx00/ VSP Fx00, HUS VM	DKC610I / RAID600, DKC710I / RAID700, DKC810I / RAID800, DW800-CBLH, DW800-CBLM3, DW800-CBLM2, DW800-CBSS1/CBSL1, DW700	2/8	(*3)	(*3)	(*3)	(*2)	(*2)	(*2)
2			4/8	Figure 4.2.2-1 (*4,*5)	Figure 4.2.2-2 (*4,*5)	(*3)	Figure 4.2.2-4 (*5,*8)	Figure 4.2.2-5 (*5,*8)	Figure 4.2.2-6 (*5,*7)
3			8/8	(*3)	(*3)	Figure 4.2.2-3 (*4)	Figure 4.2.2-7 (*8)	Figure 4.2.2-8 (*8)	Figure 4.2.2-9 (*8)
4			2/16	(*3)	(*3)	(*3)	(*2)	(*2)	(*2)
5			4/16	Figure 4.2.2-1 (*4,*5)	Figure 4.2.2-2 (*4,*5)	(*3)	Figure 4.2.2-4 (*5,*8)	Figure 4.2.2-5 (*5,*8)	Figure 4.2.2-6 (*5,*7)
6			8/16	(*3)	(*3)	Figure 4.2.2-3 (*4,*5)	Figure 4.2.2-7 (*8)	Figure 4.2.2-8 (*8)	Figure 4.2.2-9 (*8)
7			2/32	(*3)	(*3)	(*3)	(*2)	(*2)	(*2)
8			4/32	Figure 4.2.2-1 (*4,*5)	Figure 4.2.2-2 (*4,*5)	(*3)	Figure 4.2.2-4 (*5,*8)	Figure 4.2.2-5 (*5,*8)	Figure 4.2.2-6 (*5,*7)
9			8/32	(*3)	(*3)	Figure 4.2.2-3 (*4,*5)	Figure 4.2.2-7 (*8)	Figure 4.2.2-8 (*8)	Figure 4.2.2-9 (*8)

*1: In the expression of “x/y”, “x” is the number of ports to be used, and “y” is the maximum number of ports to be installed.
*2: Not supported by Hitachi Data Ingestor.
*3: Connection is not physically possible as no FC-SW exists.
*4: Tape connection is not possible as all the ports of the node are used and no FC switch is set at the same time.
*5: Some FC ports of the disk array subsystem become surpluses.
*6: The user LU and the share LU must be placed in the same host group.
*7: The case where multiple host groups are utilized for one FC port in the disk array subsystem. In this case, the license of “LUN Manager” is required.
*8: The case where a default host group is utilized for one FC port in the disk array subsystem.

Copyright © 2011, 2016, Hitachi, Ltd.

4.2.2.1 4 FC ports of USP V, USP VM, VSP, VSP G1000, VSP Gx00/VSP Fx00, and HUS VM used, 1 HBA in node, 4 ports in cluster used, without switch

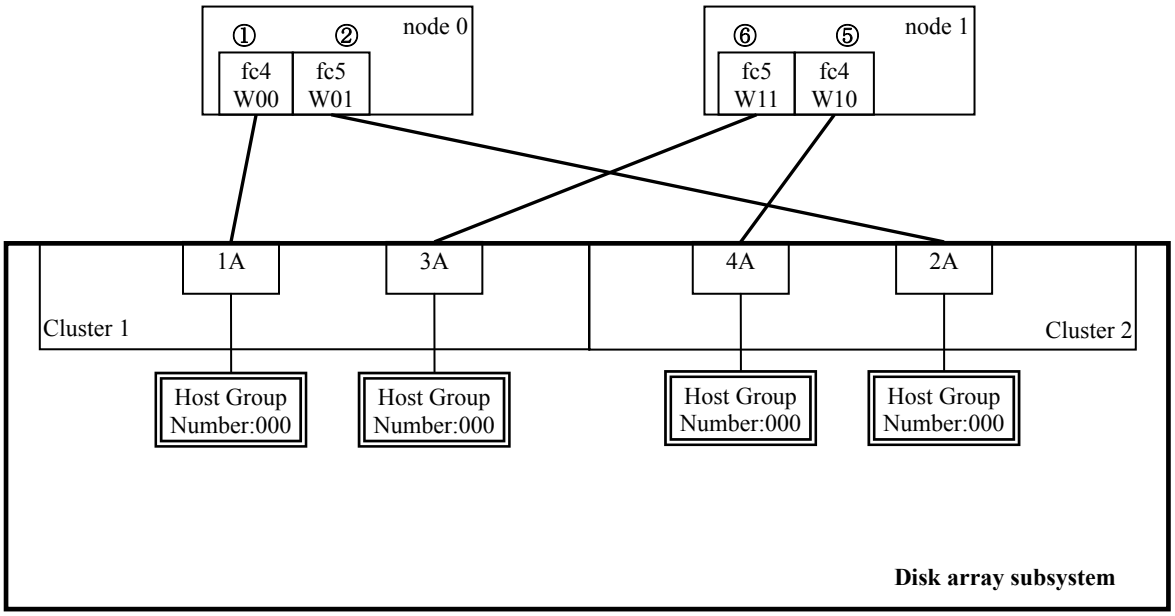

Figure 4.2.2-1 4 FC ports of USP V, USP VM, VSP, VSP G1000, VSP Gx00/VSP Fx00, and HUS VM used, 1 HBA in node, without switch

Table 4.2.2-2 Setting Example on Storage Side

LUN decimal digit	LUN hexadecimal	Port 1A decimal digit	Port 3A ⑥ HG#000	Port 2A ② HG#000	Port 4A ⑤ HG#000
		WWN:W00	WWN:W11	WWN:W01	WWN:W10
0	00h	cluster management LU	cluster management LU	cluster management LU	cluster management LU
1	01h	Command device 0	Command device 0	Command device 0	Command device 0
2	02h	User LU #1	User LU #1	User LU #1	User LU #1
to	to	to	to	to	to
255	FFh	User LU #254	User LU #254	User LU #254	User LU #254

NOTE:
- For the OS version 4.2.2-XX and later, refer to Disk Setting "Table 4.3-5 Comparison Tables of Setting Examples on Storage Side 4 (DSKST 04-0250)" and use appropriate values.
- Note that the FC port of node1 is mirrored (left and right are reversed) to the actual arrangement.
- Ensure HLUN0 is mapped to cluster management LU.
- Ensure the same LDEV is mapped to the same LUN.
- WWN of the node which is recorded on the worksheet for memo of WWN (refer to "B.5.1 Acquiring WWNs of Nodes") to the host group on the side of the disk array subsystem.
- This configuration is able to handle the User LU up to 254LDEV.
  However, up to 255 LUs can be handled in the configuration of HDI for Cloud because no command device is used.

Copyright © 2011, 2016, Hitachi, Ltd.

4.2.2.2 4 FC ports of USP V, USP VM, VSP, VSP G1000, VSP Gx00/VSP Fx00, and HUS VM used, 2 HBAs in node, 4 ports in cluster used, without switch

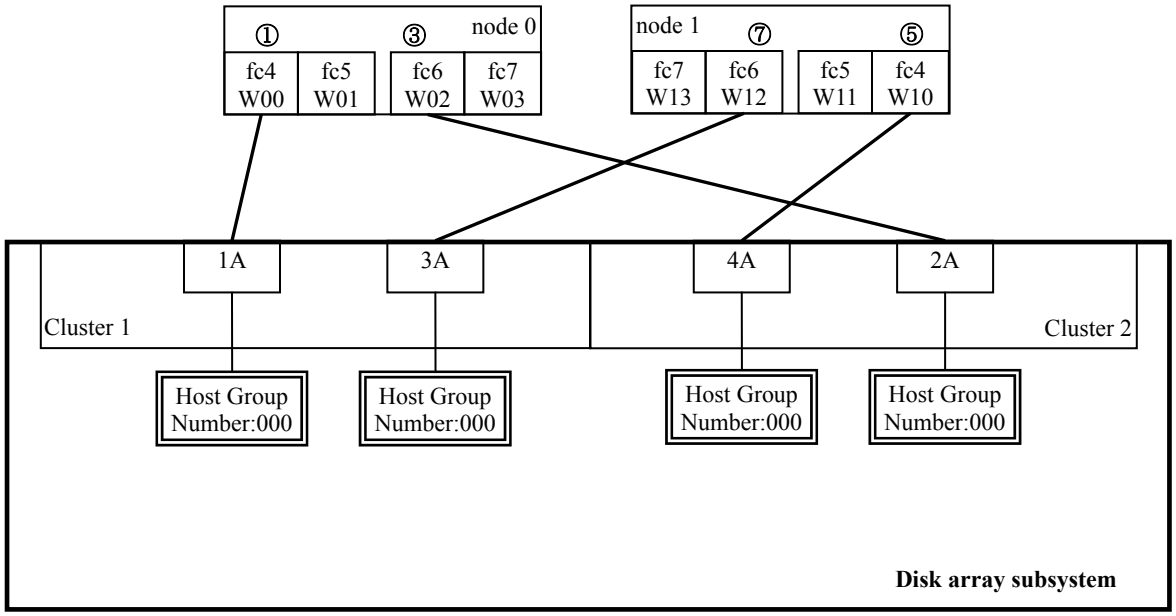

Figure 4.2.2-2 4 FC ports of USP V, USP VM, VSP, VSP G1000, VSP Gx00/VSP Fx00, and HUS VM used, 2 HBAs and 4 ports in nodes, without switch

Table 4.2.2-3 Setting Example on Storage Side

LUN decimal digit	LUN hexadecimal	Port 1A	Port 3A	Port 2A	Port 4A
		① HG#000	⑦ HG#000	③ HG#000	⑤ HG#000
		WWN:W00	WWN:W12	WWN:W02	WWN:W10
0	00h	cluster management LU	cluster management LU	cluster management LU	cluster management LU
1	01h	Command device 0	Command device 0	Command device 0	Command device 0
2	02h	User LU #1	User LU #1	User LU #1	User LU #1
to	to	to	to	to	to
255	FFh	User LU #254	User LU #254	User LU #254	User LU #254

NOTE:
- For the OS version 4.2.2-XX and later, refer to Disk Setting "Table 4.3-5 Comparison Tables of Setting Examples on Storage Side 4 (DSKST 04-0250)" and use appropriate values.
- Note that the FC port of node1 is mirrored (left and right are reversed) to the actual arrangement.
- Ensure HLUN0 is mapped to cluster management LU.
- Ensure the same LDEV is mapped to the same LUN.
- WWN of the node which is recorded on the worksheet for memo of WWN (refer to "B.5.1 Acquiring WWNs of Nodes") to the host group on the side of the disk array subsystem.
- This configuration is able to handle the User LU up to 254LDEV.
  However, up to 255 LUs can be handled in the configuration of HDI for Cloud because no command device is used.

Copyright © 2011, 2016, Hitachi, Ltd.

4.2.2.3 8 FC ports of USP V, USP VM, VSP, VSP G1000, VSP Gx00/VSP Fx00, and HUS VM used, 2 HBAs in node, 4 ports in cluster used, without switch

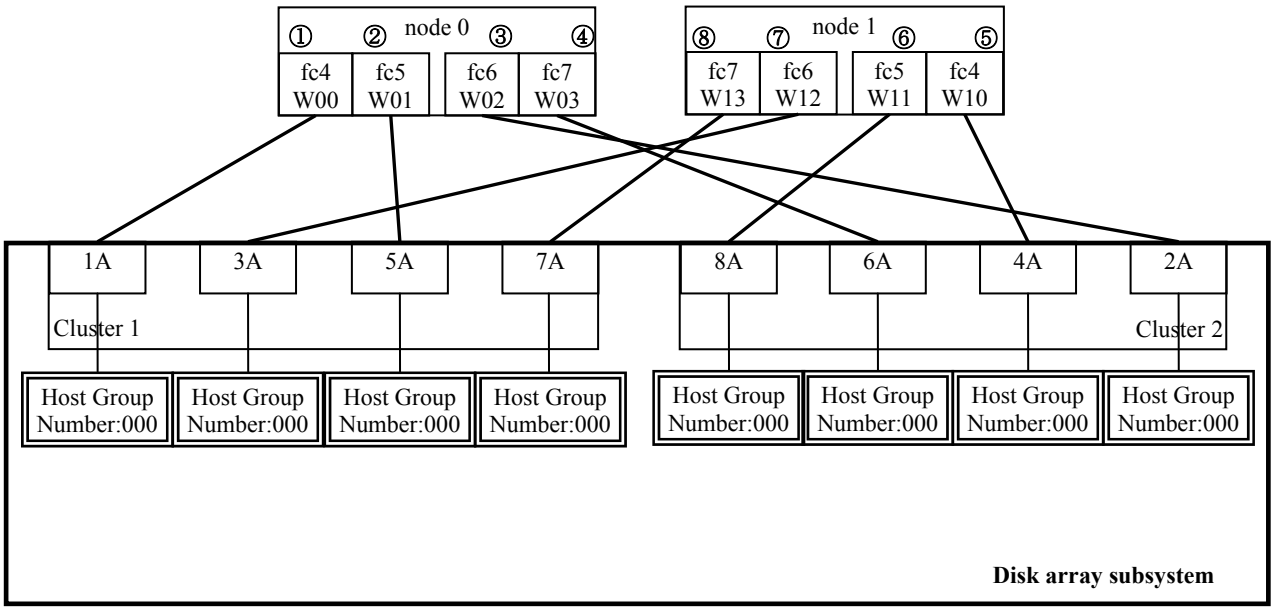

Figure 4.2.2-3 8 FC ports of USP V, USP VM, VSP, VSP G1000, VSP Gx00/VSP Fx00, and HUS VM used, 2 HBAs in node, 8 ports in cluster used, without switch

Table 4.2.2-4 Setting Example on Storage Side

LUN decimal digit	LUN hexadecimal	Port 1A HG#000 ①	Port 3A HG#000 ⑦	Port 5A HG#000 ②	Port 7A HG#000 ⑧	Port 2A HG#000 ③	Port 4A HG#000 ⑤	Port 6A HG#000 ④	Port 8A HG#000 ⑥
		WWN:W00	WWN:W12	WWN:W01	WWN:W13	WWN:W02	WWN:W10	WWN:W03	WWN:W11
0	00h	cluster management LU	cluster management LU	User LU #129	User LU #129	cluster management LU	cluster management LU	User LU #129	User LU #129
1	01h	Command device 0	Command device 0	User LU #130	User LU #130	Command device 0	Command device 0	User LU #130	User LU #130
2	02h	User LU #1	User LU #1	User LU #131	User LU #131	User LU #1	User LU #1	User LU #131	User LU #131
to	to	to	to	to	to	to	to	to	to
127	7fh	User LU #126	User LU #126	User LU #256	User LU #256	User LU #126	User LU #126	User LU #256	User LU #256
to	to	to	to	to	to	to	to	to	to
129	81h	User LU #128	User LU #128	—	—	User LU #128	User LU #128	—	—

NOTE:
- For the OS version 4.2.2-XX and later, refer to Disk Setting "Table 4.3-4 Comparison Tables of Setting Examples on Storage Side 3 (DSKST 04-0240)" and use appropriate values.
- Note that the FC port of node1 is mirrored (left and right are reversed) to the actual arrangement.
- Ensure HLUN0 is mapped to cluster management LU.
- Ensure the same LDEV is mapped to the same LUN.
- WWN of the node which is recorded on the worksheet for memo of WWN (refer to "B.5.1 Acquiring WWNs of Nodes") to the host group on the side of the disk array subsystem.
- This configuration is able to handle the User LU up to 256 LDEV.

Copyright © 2011, 2016, Hitachi, Ltd.

4.2.2.4 4 FC ports of USP V, USP VM, VSP, VSP G1000, VSP Gx00/VSP Fx00, and HUS VM used, 1 HBA in node, 4 ports in cluster used, with switches

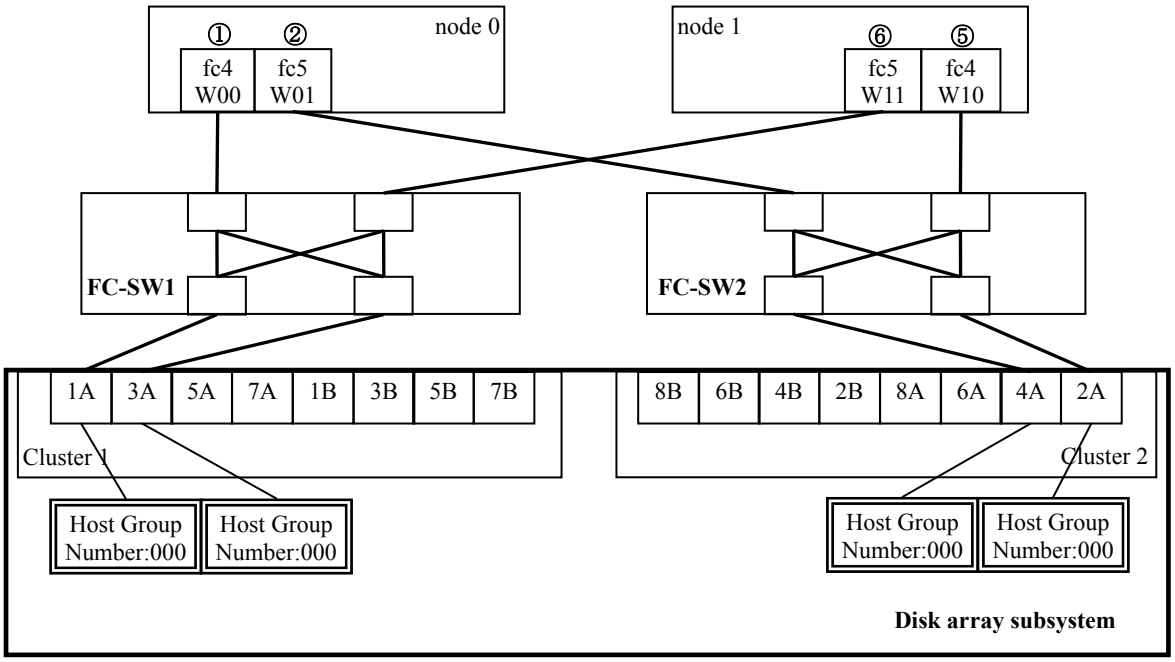

Figure 4.2.2-4 4 FC ports of USP V, USP VM, VSP, VSP G1000, VSP Gx00/VSP Fx00, and HUS VM used, 1 HBA and 4 ports in node, with switches

NOTE:
- Zoning for the FC-SW must be performed. Ask the system administrator to perform zoning for the FC-SW. Group zoning in the setting of zoning cannot be used. Ask the system administrator to perform port zoning.
- For convenience of drawing the figure, the FC ports in the nodes are mirrored (left and right are reversed).

Copyright © 2011, 2016, Hitachi, Ltd.

Table 4.2.2-5 Setting Example on Storage Side

LUN decimal digit	LUN hexadecimal	Port 1A	Port 3A	Port 2A	Port 4A
		①,⑥ HG#000	①,⑥ HG#000	②,⑤ HG#000	②,⑤ HG#000
		WWN:W00,W11	WWN:W00,11	WWN:W01,W10	WWN:W01,W10
0	00h	cluster management LU	User LU #129	cluster management LU	User LU #129
1	01h	Command device 0	User LU #130	Command device 0	User LU #130
2	02h	User LU #1	User LU #131	User LU #1	User LU #131
to	to	to	to	to	to
127	7fh	User LU #126	User LU #256	User LU #126	User LU #256
to	to	to	to	to	to
129	81h	User LU #128	—	User LU #128	—

NOTE:
- For the OS version 4.2.2-XX and later, refer to Disk Setting "Table 4.3-4 Comparison Tables of Setting Examples on Storage Side 3 (DSKST 04-0240)" and use appropriate values.
- Ensure the LUN0 is mapped to the cluster management LU.
- Ensure the same LDEV is mapped to the same LUN.
- WWN of the node which is recorded on the worksheet for memo of WWN (refer to "B.5.1 Acquiring WWNs of Nodes") to the host group on the side of the disk array subsystem.
- This configuration is able to handle the User LU up to 256 LDEV.

Copyright © 2011, 2016, Hitachi, Ltd.

4.2.2.5 4 FC ports of USP V, USP VM, VSP, VSP G1000, VSP Gx00/VSP Fx00, and HUS VM used, 2 HBAs in node, 4 ports in cluster used, with switches

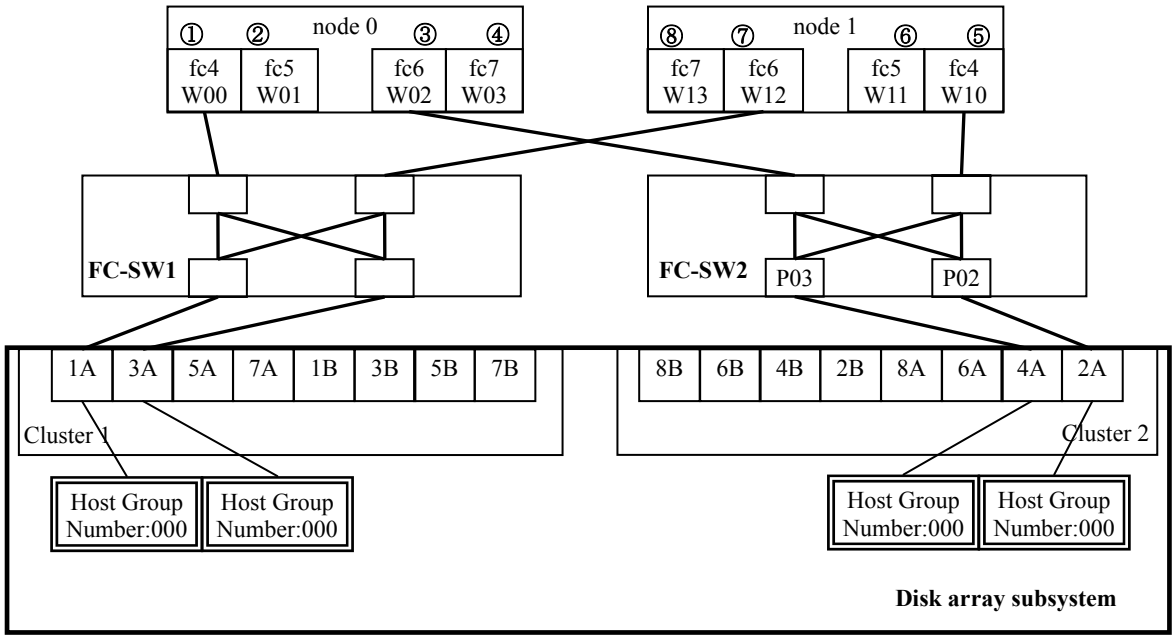

Figure 4.2.2-5 4 FC ports of USP V, USP VM, VSP, VSP G1000, VSP Gx00/VSP Fx00, and HUS VM used, 2 HBAs and 4 ports in node, with switches

NOTE:
- Zoning for the FC-SW must be performed. Ask the system administrator to perform zoning for the FC-SW. Group zoning in the setting of zoning cannot be used. Ask the system administrator to perform port zoning
- For convenience of drawing the figure, the FC ports in the nodes are mirrored (left and right are reversed).

Copyright © 2011, 2016, Hitachi, Ltd.

Table 4.2.2-6 Setting Example on Storage Side

LUN decimal digit	LUN hexadecimal	Port 1A	Port 3A	Port 2A	Port 4A
		①,⑦ HG#000	①,⑦ HG#000	③,⑤ HG#000	③,⑤ HG#000
		WWN:W00,W12	WWN:W00,12	WWN:W02,W10	WWN:W02,W10
0	00h	cluster management LU	User LU #129	cluster management LU	User LU #129
1	01h	Command device 0	User LU #130	Command device 0	User LU #130
2	02h	User LU #1	User LU #131	User LU #1	User LU #131
to	to	to	to	to	to
127	7fh	User LU #126	User LU #256	User LU #126	User LU #256
to	to	to	to	to	to
129	81h	User LU #128	—	User LU #128	—

NOTE:
- For the OS version 4.2.2-XX and later, refer to Disk Setting "Table 4.3-4 Comparison Tables of Setting Examples on Storage Side 3 (DSKST 04-0240)" and use appropriate values.
- Ensure the LUN0 is mapped to the cluster management LU.
- Ensure the same LDEV is mapped to the same LUN.
- WWN of the node which is recorded on the worksheet for memo of WWN (refer to "B.5.1 Acquiring WWNs of Nodes") to the host group on the side of the disk array subsystem.
- This configuration is able to handle the User LU up to 256 LDEV.

Copyright © 2011, 2016, Hitachi, Ltd.

4.2.2.6 4 FC ports of USP V, USP VM, VSP, VSP G1000, VSP Gx00/VSP Fx00, and HUS VM used, 2 HBAs in node, 4 ports in cluster used, with switches

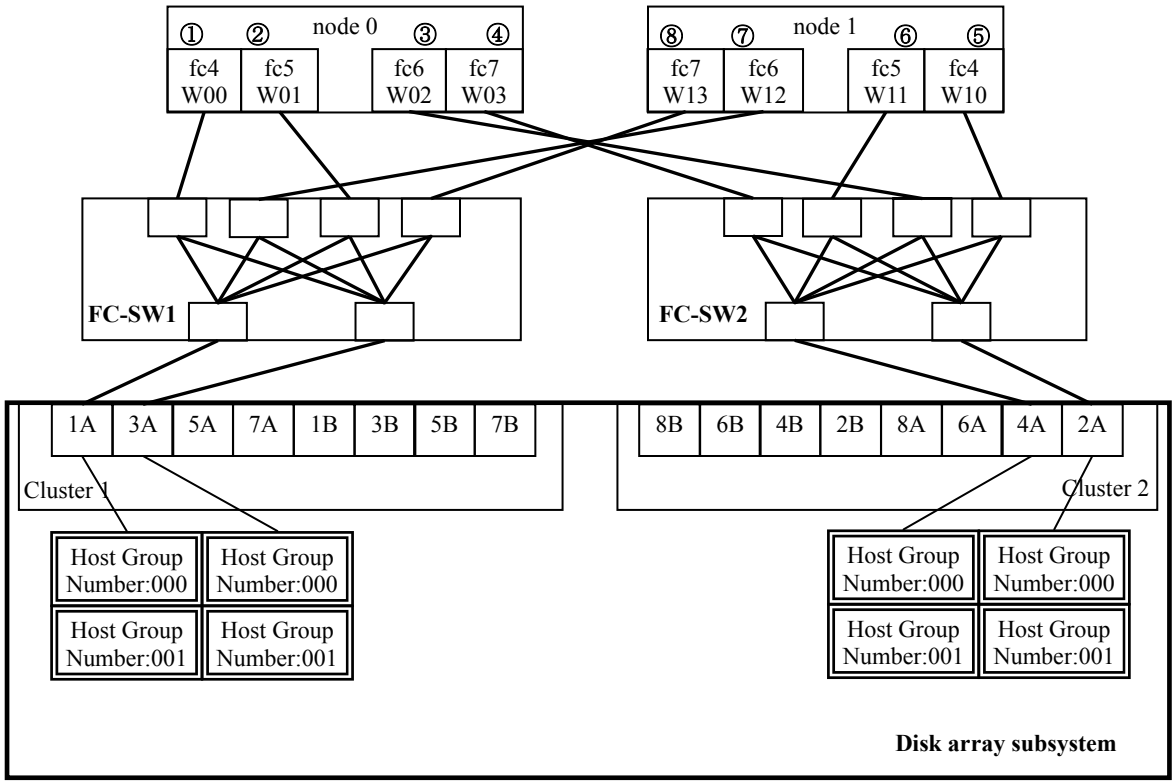

Figure 4.2.2-6 4 FC ports of USP V, USP VM, VSP, VSP G1000, VSP Gx00/VSP Fx00, and HUS VM used, 2 HBAs and 8 ports in node, with switches

NOTE:
- Zoning for the FC-SW must be performed. Ask the system administrator to perform zoning for the FC-SW. Group zoning in the setting of zoning cannot be used. Ask the system administrator to perform port zoning.
- For convenience of drawing the figure, the FC ports in the nodes are mirrored (left and right are reversed).

Copyright © 2011, 2016, Hitachi, Ltd.

Table 4.2.2-7 Setting Example on Storage Side

LUN decimal digit	LUN hexadecimal	Port 1A		Port 3A		Port 2A		Port 4A	
		HG#000 ①	HG#001 ⑧	HG#000 ⑦	HG#001 ②	HG#000 ⑤	HG#001 ④	HG#000 ③	HG#001 ⑥
		WWN:W00	WWN:W13	WWN:W12	WWN:W01	WWN:W10	WWN:W03	WWN:W02	WWN:W11
0	00h	cluster management LU	User LU #129	cluster management LU	User LU #129	cluster management LU	User LU #129	cluster management LU	User LU #129
1	01h	Command device 0	User LU #130	Command device 0	User LU #130	Command device 0	User LU #130	Command device 0	User LU #130
2	02h	User LU #1	User LU #131	User LU #1	User LU #131	User LU #1	User LU #131	User LU #1	User LU #131
to	to	to	to	to	to	to	to	to	to
127	7fh	User LU #126	User LU #256	User LU #126	User LU #256	User LU #126	User LU #256	User LU #126	User LU #256
to	to	to	to	to	to	to	to	to	to
129	81h	User LU #128	—	User LU #128	—	User LU #128	—	User LU #128	—

NOTE:
- For the OS version 4.2.2-XX and later, refer to Disk Setting "Table 4.3-4 Comparison Tables of Setting Examples on Storage Side 3 (DSKST 04-0240)" and use appropriate values.
- Ensure the LUN0 is mapped to the cluster management LU.
- Ensure the same LDEV is mapped to the same LUN.
- WWN of the node which is recorded on the worksheet for memo of WWN (refer to "B.5.1 Acquiring WWNs of Nodes") to the host group on the side of the disk array subsystem.
- This configuration is able to handle the User LU up to 256 LDEV.

Copyright © 2011, 2016, Hitachi, Ltd.

4.2.2.7 8 FC ports of USP V, USP VM, VSP, VSP G1000, VSP Gx00/VSP Fx00, and HUS VM used, 1 HBA in node, 4 ports in cluster used, with switches

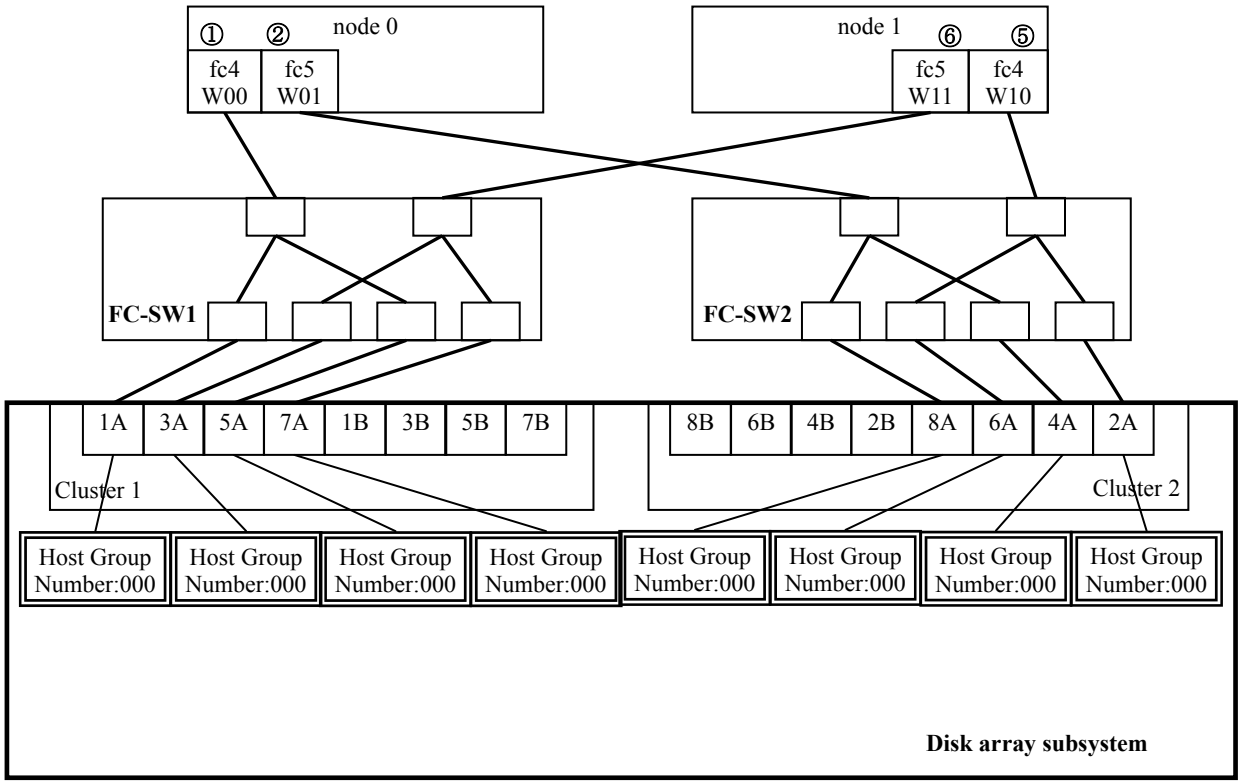

Figure 4.2.2-7 8 FC ports of USP V, USP VM, VSP, VSP G1000, VSP Gx00/VSP Fx00, and HUS VM used, 1 HBA and 8 ports in node, with switches

NOTE:
- Zoning for the FC-SW must be performed. Ask the system administrator to perform zoning for the FC-SW. Group zoning in the setting of zoning cannot be used. Ask the system administrator to perform port zoning.
- For convenience of drawing the figure, the FC ports in the nodes are mirrored (left and right are reversed).

Copyright © 2011, 2016, Hitachi, Ltd.

Table 4.2.2-8 Setting Example on Storage Side

LUN decimal digit	LUN hexadecimal	Port 1A	Port 3A	Port 5A	Port 7A	Port 2A	Port 4A	Port 6A	Port 8A
		HG#000 ①	HG#001 ⑥	HG#000 ①	HG#001 ⑥	HG#000 ⑤	HG#001 ②	HG#000 ⑤	HG#001 ②
		WWN:W00	WWN:W11	WWN:W00	WWN:W11	WWN:W10	WWN:W01	WWN:W10	WWN:W01
0	00h	cluster management LU	cluster management LU	User LU #129	User LU #129	cluster management LU	cluster management LU	User LU #129	User LU #129
1	01h	Command device 0	Command device 0	User LU #130	User LU #130	Command device 0	Command device 0	User LU #130	User LU #130
2	02h	User LU #1	User LU #1	User LU #131	User LU #131	User LU #1	User LU #1	User LU #131	User LU #131
to	to	to	to	to	to	to	to	to	to
127	7fh	User LU #126	User LU #126	User LU #256	User LU #256	User LU #126	User LU #126	User LU #256	User LU #256
to	to	to	to	to	to	to	to	to	to
129	81h	User LU #128	User LU #128	—	—	User LU #128	User LU #128	—	—

NOTE:
- For the OS version 4.2.2-XX and later, refer to Disk Setting "Table 4.3-4 Comparison Tables of Setting Examples on Storage Side 3 (DSKST 04-0240)" and use appropriate values.
- Ensure the LUN0 is mapped to the cluster management LU.
- Ensure the same LDEV is mapped to the same LUN.
- WWN of the node which is recorded on the worksheet for memo of WWN (refer to "B.5.1 Acquiring WWNs of Nodes") to the host group on the side of the disk array subsystem.
- This configuration is able to handle the User LU up to 256 LDEV.

Copyright © 2011, 2016, Hitachi, Ltd.

4.2.2.8 8 FC ports of USP V, USP VM, VSP, VSP G1000, VSP Gx00/VSP Fx00, and HUS VM used, 2 HBAs in node, 4 ports in cluster used, with switches

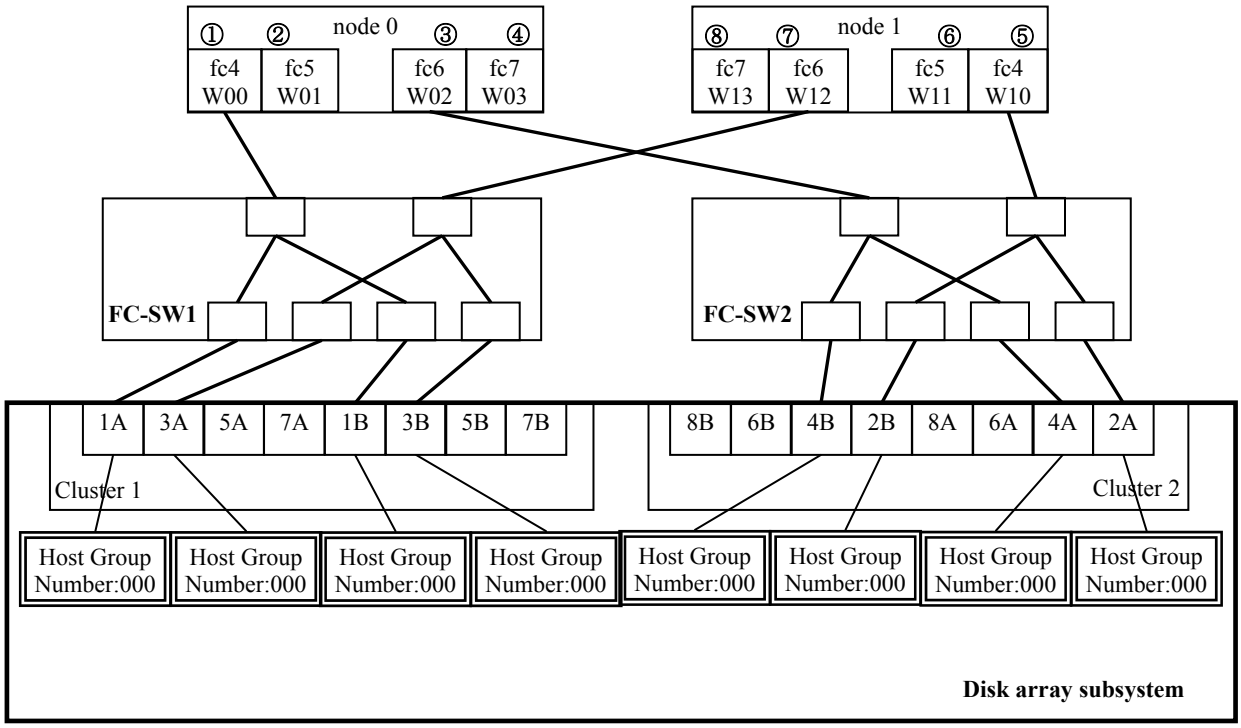

Figure 4.2.2-8 8 FC ports of USP V, USP VM, VSP, VSP G1000, VSP Gx00/VSP Fx00, and HUS VM used, 2 HBAs and 4 ports in node, with switches

NOTE:
- Zoning for the FC-SW must be performed. Ask the system administrator to perform zoning for the FC-SW. Group zoning in the setting of zoning cannot be used. Ask the system administrator to perform port zoning.
- For convenience of drawing the figure, the FC ports in the nodes are mirrored (left and right are reversed).

Copyright © 2011, 2016, Hitachi, Ltd.

Table 4.2.2-9 Setting Example on Storage Side

LUN decimal digit	LUN hexadecimal	Port 1A	Port 3A	Port 1B	Port 3B	Port 2A	Port 4A	Port 2B	Port 4B
		HG#000 ①	HG#000 ⑦	HG#000 ①	HG#000 ⑦	HG#000 ③	HG#000 ⑤	HG#000 ⑤	HG#000 ③
		WWN:W00	WWN:W12	WWN:W00	WWN:W12	WWN:W02	WWN:W10	WWN:W02	WWN:W10
0	00h	cluster management LU	cluster management LU	User LU #129	User LU #129	cluster management LU	cluster management LU	User LU #129	User LU #129
1	01h	Command device 0	Command device 0	User LU #130	User LU #130	Command device 0	Command device 0	User LU #130	User LU #130
2	02h	User LU #1	User LU #1	User LU #131	User LU #131	User LU #1	User LU #1	User LU #131	User LU #131
to	to	to	to	to	to	to	to	to	to
127	7fh	User LU #126	User LU #126	User LU #256	User LU #256	User LU #126	User LU #126	User LU #256	User LU #256
to	to	to	to	to	to	to	to	to	to
129	81h	User LU #128	User LU #128	—	—	User LU #128	User LU #128	—	—

NOTE:
- For the OS version 4.2.2-XX and later, refer to Disk Setting "Table 4.3-4 Comparison Tables of Setting Examples on Storage Side 3 (DSKST 04-0240)" and use appropriate values.
- Ensure the LUN0 is mapped to the cluster management LU.
- Ensure the same LDEV is mapped to the same LUN.
- WWN of the node which is recorded on the worksheet for memo of WWN (refer to "B.5.1 Acquiring WWNs of Nodes") to the host group on the side of the disk array subsystem.
- This configuration is able to handle the User LU up to 256 LDEV.

Copyright © 2011, 2016, Hitachi, Ltd.

4.2.2.9 8 FC ports of USP V, USP VM, VSP, VSP G1000, VSP Gx00/VSP Fx00, and HUS VM used, 2 HBAs in node, 8 ports in cluster used, with switches

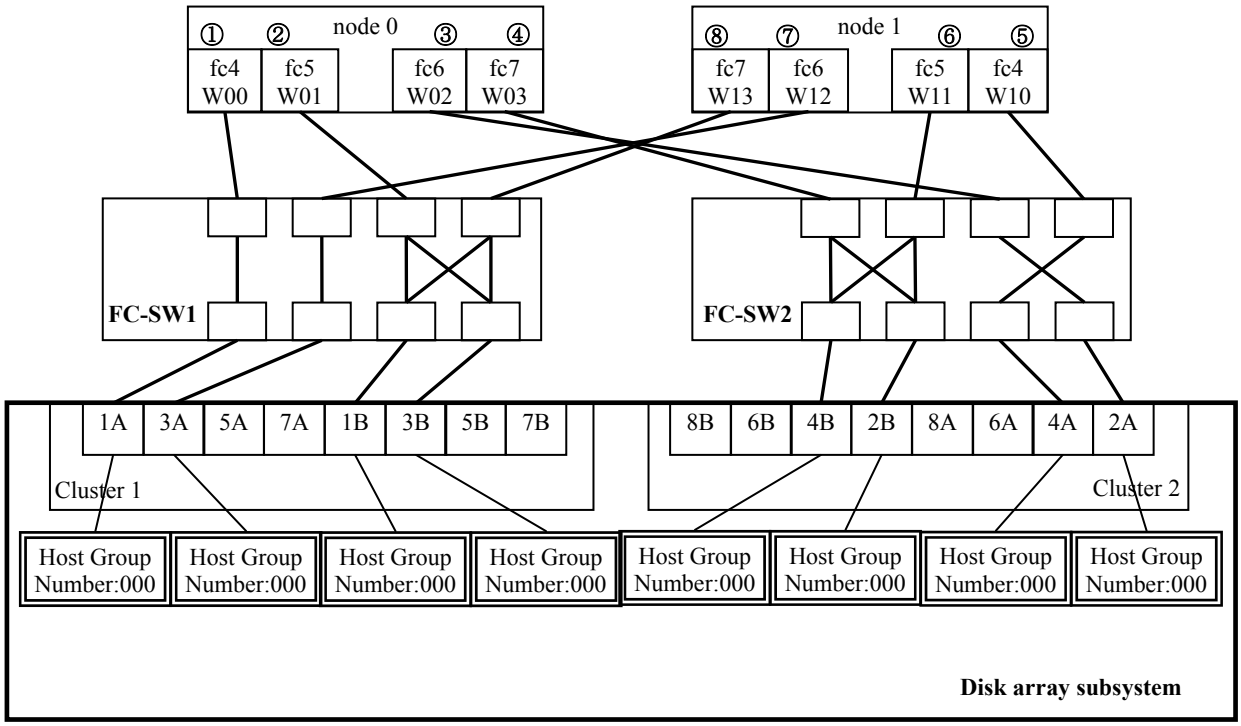

Figure 4.2.2-9 8 FC ports of USP V, USP VM, VSP, VSP G1000, VSP Gx00/VSP Fx00, and HUS VM used, 2 HBAs and 4 ports in node, with switches

NOTE:
- Zoning for the FC-SW must be performed. Ask the system administrator to perform zoning for the FC-SW. Group zoning in the setting of zoning cannot be used. Ask the system administrator to perform port zoning.
- For convenience of drawing the figure, the FC ports in the nodes are mirrored (left and right are reversed).

Copyright © 2011, 2016, Hitachi, Ltd.

Table 4.2.2-10 Setting Example on Storage Side

LUN decimal digit	LUN hexadecimal	Port 1A	Port 3A	Port 1B	Port 3B	Port 2A	Port 4A	Port 2B	Port 4B
		HG#000 ①	HG#000 ⑦	HG#000 ②,⑧	HG#000 ②,⑧	HG#000 ③	HG#000 ⑤	HG#000 ④,⑥	HG#000 ④,⑥
		WWN:W00	WWN:W12	WWN: W01,W13	WWN: W01,W13	WWN:W02	WWN:W10	WWN: W03,W11	WWN: W03,W11
0	00h	cluster management LU	cluster management LU	User LU #129	User LU #129	cluster management LU	cluster management LU	User LU #129	User LU #129
1	01h	Command device 0	Command device 0	User LU #130	User LU #130	Command device 0	Command device 0	User LU #130	User LU #130
2	02h	User LU #1	User LU #1	User LU #131	User LU #131	User LU #1	User LU #1	User LU #131	User LU #131
to	to	to	to	to	to	to	to	to	to
127	7fh	User LU #126	User LU #126	User LU #256	User LU #256	User LU #126	User LU #126	User LU #256	User LU #256
to	to	to	to	to	to	to	to	to	to
129	81h	User LU #128	User LU #128	—	—	User LU #128	User LU #128	—	—

NOTE:
- For the OS version 4.2.2-XX and later, refer to Disk Setting "Table 4.3-4 Comparison Tables of Setting Examples on Storage Side 3 (DSKST 04-0240)" and use appropriate values.
- Ensure the LUN0 is mapped to the cluster management LU.
- Ensure the same LDEV is mapped to the same LUN.
- WWN of the node which is recorded on the worksheet for memo of WWN (refer to "B.5.1 Acquiring WWNs of Nodes") to the host group on the side of the disk array subsystem.
- This configuration is able to handle the User LU up to 256 LDEV.

Copyright © 2011, 2016, Hitachi, Ltd.

4.3 Comparison Tables of Setting Examples on Storage Side

The setting example of the LU (LDEV) mapping on the storage side differs between the OS version 4.2.1-XX or earlier and the OS version 4.2.2-XX or later because the maximum number of user LUs that physical nodes can recognize differs between them as shown in Table 4.3-1.

The OS version 4.2.1-XX and earlier is used for showing the setting examples on the storage side. Use the underlined values in Table 4.3-2, 4.3-3, and 4.3-4 for the OS version 4.2.2-XX and later.

Table 4.3-1 Maximum number of user LUs

#	Item	The OS version 4.2.1-XX and earlier	The OS version 4.2.2-XX and later
1	Maximum number of user LUs/LDEVs	256	511

Copyright © 2011, 2016, Hitachi, Ltd.

- For Disk Setting “Table 2.2-6 Setting Example on Storage Side of Example of the Configuration of HDI for HCP” (DSKST 02-0070).

Table 4.3-2 Comparison Tables of Setting Examples on Storage Side 1

Verify the following tables by referring to the configuration example of nodes and disk array subsystems, which correspond to the setting example on the storage side below because a Host Group number and a port name defer for each configuration.

(The OS version 4.2.1-XX and earlier)

HLUN	Port 0A			Port 0B			Port 1A			Port 1B		
	HG#001	HG#002	HG#003	HG#001	HG#002	HG#003	HG#001	HG#002	HG#003	HG#001	HG#002	HG#003
	WWN:W10	WWN:W20	WWN:W04	WWN:W30	WWN:W40	WWN:W15	WWN:W31	WWN:W41	WWN:W14	WWN:W11	WWN:W21	WWN:W05
0	HCP OS LU #1	HCP OS LU #2	cluster management LU	HCP OS LU #3	HCP OS LU #4	cluster management LU	HCP OS LU #3	HCP OS LU #4	cluster management LU	HCP OS LU #1	HCP OS LU #2	cluster management LU
1	HCP DATA LU #1	HCP DATA LU #2	User LU #1	HCP DATA LU #3	HCP DATA LU #4	User LU #1	HCP DATA LU #3	HCP DATA LU #4	User LU #1	HCP DATA LU #1	HCP DATA LU #2	User LU #1
2	HCP DATA LU #5	HCP DATA LU #6	User LU #2	HCP DATA LU #7	HCP DATA LU #8	User LU #2	HCP DATA LU #7	HCP DATA LU #8	User LU #2	HCP DATA LU #5	HCP DATA LU #6	User LU #2
to	to	to	to	to	to	to	to	to	to	to	to	to
129	HCP DATA LU #2	HCP DATA LU #1	User LU #**129**	HCP DATA LU #4	HCP DATA LU #3	User LU #**129**	HCP DATA LU #4	HCP DATA LU #3	User LU #**129**	HCP DATA LU #2	HCP DATA LU #1	User LU #**129**
130	HCP DATA LU #6	HCP DATA LU #5	User LU #**130**	HCP DATA LU #8	HCP DATA LU #7	User LU #**130**	HCP DATA LU #8	HCP DATA LU #7	User LU #**130**	HCP DATA LU #6	HCP DATA LU #5	User LU #**130**
to	to	to	to	to	to	to	to	to	to	to	to	to
254	—	—	User LU #**254**	—	—	User LU #**254**	—	—	User LU #**254**	—	—	User LU #**254**
255	—	—	User LU #**255**	—	—	User LU #**255**	—	—	User LU #**255**	—	—	User LU #**255**

Copyright © 2014, 2016, Hitachi, Ltd.

(The OS version 4.2.2-XX and later)

HLUN	Port 0A			Port 0B			Port 1A			Port 1B		
	HG#001	HG#002	HG#003	HG#001	HG#002	HG#003	HG#001	HG#002	HG#003	HG#001	HG#002	HG#003
	WWN:W10	WWN:W20	WWN:W04	WWN:W30	WWN:W40	WWN:W15	WWN:W31	WWN:W41	WWN:W14	WWN:W11	WWN:W21	WWN:W05
0	HCP OS LU #1	HCP OS LU #2	cluster management LU	HCP OS LU #3	HCP OS LU #4	cluster management LU	HCP OS LU #3	HCP OS LU #4	cluster management LU	HCP OS LU #1	HCP OS LU #2	cluster management LU
1	HCP DATA LU #1	HCP DATA LU #2	User LU #1	HCP DATA LU #3	HCP DATA LU #4	User LU #1	HCP DATA LU #3	HCP DATA LU #4	User LU #1	HCP DATA LU #1	HCP DATA LU #2	User LU #1
2	HCP DATA LU #5	HCP DATA LU #6	User LU #2	HCP DATA LU #7	HCP DATA LU #8	User LU #2	HCP DATA LU #7	HCP DATA LU #8	User LU #2	HCP DATA LU #5	HCP DATA LU #6	User LU #2
to	to	to	to	to	to	to	to	to	to	to	to	to
257	HCP DATA LU #2	HCP DATA LU #1	User LU #**257**	HCP DATA LU #4	HCP DATA LU #3	User LU #**257**	HCP DATA LU #4	HCP DATA LU #3	User LU #**257**	HCP DATA LU #2	HCP DATA LU #1	User LU #**257**
258	HCP DATA LU #6	HCP DATA LU #5	User LU #**258**	HCP DATA LU #8	HCP DATA LU #7	User LU #**258**	HCP DATA LU #8	HCP DATA LU #7	User LU #**258**	HCP DATA LU #6	HCP DATA LU #5	User LU #**258**
to	to	to	to	to	to	to	to	to	to	to	to	to
510	—	—	User LU #**510**	—	—	User LU #**510**	—	—	User LU #**510**	—	—	User LU #**510**
511	—	—	User LU #**511**	—	—	User LU #**511**	—	—	User LU #**511**	—	—	User LU #**511**

Copyright © 2014, 2016, Hitachi, Ltd.

- For Disk Setting “Table 2.2-7 Setting Example on Storage Side of Example of the Configuration of HDI for Cloud” (DSKST 02-0080).

Table 4.3-3 Comparison Tables of Setting Examples on Storage Side 2

Verify the following tables by referring to the configuration example of nodes and disk array subsystems, which correspond to the setting example on the storage side below because a Host Group number and a port name defer for each configuration.

(The OS version 4.2.1-XX and earlier)

HLUN	Port 0A	Port 0B	Port 1A	Port 1B
	HG#000	HG#000	HG#000	HG#000
	WWN:W04	WWN:W15	WWN:W14	WWN:W05
0	cluster management LU	cluster management LU	cluster management LU	cluster management LU
1	User LU #1	User LU #1	User LU #1	User LU #1
2	User LU #2	User LU #2	User LU #2	User LU #2
to	to	to	to	to
254	User LU #**254**	User LU #**254**	User LU #**254**	User LU #**254**
255	User LU #**255**	User LU #**255**	User LU #**255**	User LU #**255**

(The OS version 4.2.2-XX and later)

HLUN	Port 0A	Port 0B	Port 1A	Port 1B
	HG#000	HG#000	HG#000	HG#000
	WWN:W04	WWN:W15	WWN:W14	WWN:W05
0	cluster management LU	cluster management LU	cluster management LU	cluster management LU
1	User LU #1	User LU #1	User LU #1	User LU #1
2	User LU #2	User LU #2	User LU #2	User LU #2
to	to	to	to	to
510	User LU #**510**	User LU #**510**	User LU #**510**	User LU #**510**
511	User LU #**511**	User LU #**511**	User LU #**511**	User LU #**511**

Copyright © 2014, 2016, Hitachi, Ltd.

- For Disk Setting "Table 2.2-8 Setting example on the side of storage subsystem in the Basic configuration" (DSKST 02-0081).

Table 4.3-4 Comparison Tables of Setting Examples on Storage Side 3

Verify the following tables by referring to the configuration example of nodes and disk array subsystems, which correspond to the setting example on the storage side below because a Host Group number and a port name defer for each configuration.

(The OS version 4.2.1-XX and earlier)

HLUN	Port 0A	Port 0D	Port 0B	Port 0C	Port 1A	Port 1D	Port 1B	Port 1C
	HG#000	HG#000	HG#000	HG#000	HG#000	HG#000	HG#000	HG#000
	WWN:W04	WWN:W17	WWN:W05	WWN:W16	WWN:W14	WWN:W07	WWN:W15	WWN:W06
0	cluster management LU	User LU #129	User LU #129	cluster management LU	cluster management LU	User LU #129	User LU #129	cluster management LU
1	command device #0	User LU #130	User LU #130	command device #0	command device #0	User LU #130	User LU #130	command device #0
2	User LU #1	User LU #131	User LU #131	User LU #1	User LU #1	User LU #131	User LU #131	User LU #1
to	to	to	to	to	to	to	to	to
127	User LU #126	User LU #256	User LU #256	User LU #126	User LU #126	User LU #256	User LU #256	User LU #126
to	to	to	to	to	to	to	to	to
129	User LU #128	—	—	User LU #128	User LU #128	—	—	User LU #128

NOTE:
- Ensure HLUN0 is mapped to cluster management LU.
- Ensure the same HLUN is mapped to the same LU.
- This configuration can handle up to 256 user LUs.
- For convenience of drawing the figure, the FC ports in the node 1 are mirrored (left and right are reversed).

(The OS version 4.2.2-XX and later)

HLUN	Port 0A	Port 0D	Port 0B	Port 0C	Port 1A	Port 1D	Port 1B	Port 1C
	HG#000	HG#000	HG#000	HG#000	HG#000	HG#000	HG#000	HG#000
	WWN:W04	WWN:W17	WWN:W05	WWN:W16	WWN:W14	WWN:W07	WWN:W15	WWN:W06
0	cluster management LU	User LU #256	User LU #256	cluster management LU	cluster management LU	User LU #256	User LU #256	cluster management LU
1	command device #0	User LU #257	User LU #257	command device #0	command device #0	User LU #257	User LU #257	command device #0
2	User LU #1	User LU #258	User LU #258	User LU #1	User LU #1	User LU #258	User LU #258	User LU #1
to	to	to	to	to	to	to	to	to
255	User LU #253	User LU #511	User LU #511	User LU #253	User LU #253	User LU #511	User LU #511	User LU #253
to	to	to	to	to	to	to	to	to
257	User LU #255	—	—	User LU #255	User LU #255	—	—	User LU #255

NOTE:
- Ensure HLUN0 is mapped to cluster management LU.
- Ensure the same HLUN is mapped to the same LU.
- This configuration can handle up to 511 user LUs.
- For convenience of drawing the figure, the FC ports in the node 1 are mirrored (left and right are reversed).

Copyright © 2014, 2016, Hitachi, Ltd.

- For Disk Setting "Table 4.1.3-2 Setting Example on Storage Side" (DSKST 04-0052).

Table 4.3-5 Comparison Tables of Setting Examples on Storage Side 4

Verify the following tables by referring to the configuration example of nodes and disk array subsystems, which correspond to the setting example on the storage side below because a Host Group number and a port name defer for each configuration.

(The OS version 4.2.1-XX and earlier)

HLUN	Port 0A	Port 0B	Port 1A	Port 1B
	HG#000	HG#000	HG#000	HG#000
	① WWN:W04	⑥ WWN:W15	⑤ WWN:W14	② WWN:W05
0	cluster management LU	cluster management LU	cluster management LU	cluster management LU
1	Command device 0	Command device 0	Command device 0	Command device 0
2	User LU #1	User LU #1	User LU #1	User LU #1
to	to	to	to	to
255	User LU #**254**	User LU #**254**	User LU #**254**	User LU #**254**

NOTE:
- Ensure HLUN0 is mapped to cluster management LU.
- Ensure the same HLUN is mapped to the same LU.
- Assign the WWN of the node which is recorded on the worksheet for memo of WWN (refer to "B.5.1 Acquiring WWNs of Nodes") to the host group on the side of the disk array subsystem.
- This configuration can handle up to **254** user LUs.
  However, up to **255** LUs can be handled in the configuration of HDI for Cloud because no command device is used.
- For convenience of drawing the figure, the FC ports in the node 1 are mirrored (left and right are reversed).

(The OS version 4.2.2-XX and later)

HLUN	Port 0A	Port 0B	Port 1A	Port 1B
	HG#000	HG#000	HG#000	HG#000
	① WWN:W04	⑥ WWN:W15	⑤ WWN:W14	② WWN:W05
0	cluster management LU	cluster management LU	cluster management LU	cluster management LU
1	Command device 0	Command device 0	Command device 0	Command device 0
2	User LU #1	User LU #1	User LU #1	User LU #1
to	to	to	to	to
511	User LU #**510**	User LU #**510**	User LU #**510**	User LU #**510**

NOTE:
- Ensure HLUN0 is mapped to cluster management LU.
- Ensure the same HLUN is mapped to the same LU.
- Assign the WWN of the node which is recorded on the worksheet for memo of WWN (refer to "B.5.1 Acquiring WWNs of Nodes") to the host group on the side of the disk array subsystem.
- This configuration can handle up to **510** user LUs.
  However, up to **511** LUs can be handled in the configuration of HDI for Cloud because no command device is used.
- For convenience of drawing the figure, the FC ports in the node 1 are mirrored (left and right are reversed).

Copyright © 2014, 2016, Hitachi, Ltd.

- For Disk Setting "Table 4.1.3-4 Setting Example on Storage Side" (DSKST 04-0054).

Table 4.3-6 Comparison Tables of Setting Examples on Storage Side 5

Verify the following tables by referring to the configuration example of nodes and disk array subsystems, which correspond to the setting example on the storage side below because a Host Group number and a port name defer for each configuration.

(The OS version 4.2.1-XX and earlier)

HLUN	Port 0A	Port 0D	Port 0B	Port 0C	Port 1A	Port 1D	Port 1B	Port 1C
	HG#000	HG#000	HG#000	HG#000	HG#000	HG#000	HG#000	HG#000
	WWN:W02 ①	WWN:W17 ⑧	WWN:W03 ②	WWN:W16 ⑦	WWN:W12 ⑤	WWN:W07 ④	WWN:W13 ⑥	WWN:W06 ③
0	cluster management LU	User LU #255	User LU #255	cluster management LU	cluster management LU	User LU #255	User LU #255	cluster management LU
1	Command device 0	User LU #256 (*1)	User LU #256 (*1)	Command device 0	Command device 0	User LU #256 (*1)	User LU #256 (*1)	Command device 0
2	User LU #1	—	—	User LU #1	User LU #1	—	—	User LU #1
to	to	to	to	to	to	to	to	to
255	User LU #254	—	—	User LU #254	User LU #254	—	—	User LU #254

NOTE:
- Ensure HLUN0 is mapped to cluster management LU.
- Ensure the same HLUN is mapped to the same LU.
- Assign the WWN of the node which is recorded on the worksheet for memo of WWN (refer to "B.5.1 Acquiring WWNs of Nodes") to the host group on the side of the disk array subsystem.
- For convenience of drawing the figure, the FC ports in the node 1 are mirrored (left and right are reversed).
- This configuration is able to handle the User LU up to 256 LDEV.

(The OS version 4.2.2-XX and later)

HLUN	Port 0A	Port 0D	Port 0B	Port 0C	Port 1A	Port 1D	Port 1B	Port 1C
	HG#000	HG#000	HG#000	HG#000	HG#000	HG#000	HG#000	HG#000
	WWN:W02 ①	WWN:W17 ⑧	WWN:W03 ②	WWN:W16 ⑦	WWN:W12 ⑤	WWN:W07 ④	WWN:W13 ⑥	WWN:W06 ③
0	cluster management LU	User LU #511	User LU #511	cluster management LU	cluster management LU	User LU #511	User LU #511	cluster management LU
1	Command device 0	— (*1)	— (*1)	Command device 0	Command device 0	— (*1)	— (*1)	Command device 0
2	User LU #1	—	—	User LU #1	User LU #1	—	—	User LU #1
to	to	to	to	to	to	to	to	to
511	User LU #510	—	—	User LU #510	User LU #510	—	—	User LU #510

NOTE:
- Ensure HLUN0 is mapped to cluster management LU.
- Ensure the same HLUN is mapped to the same LU.
- Assign the WWN of the node which is recorded on the worksheet for memo of WWN (refer to "B.5.1 Acquiring WWNs of Nodes") to the host group on the side of the disk array subsystem.
- For convenience of drawing the figure, the FC ports in the node 1 are mirrored (left and right are reversed).
- This configuration is able to handle the User LU up to 511 LDEV.

*1: No more user LU can be assigned because the number of user LUs reaches the maximum in the table for the OS version 4.2.2-XX and later.

Copyright © 2014, 2016, Hitachi, Ltd.