Addition, Subtraction and Relocation

Chapter 1 Adding Optional Components ····· ADD 01-0000
Chapter 2 Subtracting Optional Components ····· ADD 02-0000
Chapter 3 Appendix A Replacing two nodes of the cluster configuration with the new nodes ····· ADD 03-0000

Copyright © 2010, 2014, Hitachi, Ltd.

This page is for editorial purpose only.

Copyright © 2010, Hitachi, Ltd.

Chapter 1 Adding Optional Components

Table 1-1 shows the list of optional components that can be added in the cluster configuration, and Table 1-2 shows the list of optional components that can be added in the single node configuration.

Table 1-1 List of Optional Components to Add (Cluster Configuration)

#	Components to Add	Possible /Impossible to Add				Reference place/Remarks
		HA8000 RS220KK	Dell™ PowerEdge™ R710	CR210HM	D51B-2U	
1	Memory	Impossible	Impossible	Impossible	Possible	Addition, Subtraction and Relocation "1.7.1 Additional Memory Installation (Cluster Configuration)" (ADD 01-0440)
2	Fibre Channel card	Impossible		Impossible	Impossible	—
3	GbE-4Port / 10GbE-2Port card	Impossible		Impossible	Possible	Addition, Subtraction and Relocation "1.6.2 Additional GbE-4Port / 10GbE-2Port Card Installation (Cluster Configuration)" (ADD 01-0400)
4	Disk array (multi array)	Possible		Possible	Impossible	Addition, Subtraction and Relocation "1.2 Additional Disk Array Installation (Cluster Configuration)" (ADD 01-0050)
5	Internal drive	Impossible	Impossible	Impossible	Impossible	—

Table 1-2 List of Optional Components to Add (Single Node Configuration)

#	Components to Add	Possible /Impossible to Add					Reference place /Remarks
		HA8000 RS220KK	Dell™ PowerEdge™ R710	CR210HM	CR220SM	D51B-2U	
1	Memory	Impossible	Impossible	Impossible	Impossible	Possible	Addition, Subtraction and Relocation "1.7.2 Additional Memory Installation (Single Node Configuration)" (ADD 01-0500)
2	Fibre Channel card			Impossible	Possible	Impossible	Addition, Subtraction and Relocation "1.4 Additional Fibre Channel Card Installation" (ADD 01-0340)
3	GbE-4Port / 10GbE-2Port card			Possible	Impossible	Possible	Addition, Subtraction and Relocation "1.6.1 Additional GbE-4Port / 10GbE-2Port Card Installation (Single Node Configuration)" (ADD 01-0380)
4	Disk array			Impossible	Possible	Impossible	Addition, Subtraction and Relocation "1.5 Additional Disk Array Installation (Single Node Configuration)" (ADD 01-0360)
5	Internal drive			Impossible	Possible	Possible	Addition, Subtraction and Relocation "1.3 Additional drive Installation" (ADD 01-0320)

Copyright © 2010, 2016, Hitachi, Ltd.

1.1 This Page is Intentionally Blanked

Copyright © 2010, 2011, Hitachi, Ltd.

This page is for editorial purpose only.

Copyright © 2011, Hitachi, Ltd.

This page is for editorial purpose only.

Copyright © 2011, Hitachi, Ltd.

This page is for editorial purpose only.

Copyright © 2011, Hitachi, Ltd.

1.2 Additional Disk Array Installation (Cluster Configuration)

In this chapter, following the procedure below, a new disk array is additionally installed and it is confirmed whether the additionally installed disk array is appropriately connected or not.

NOTE: The port names of the respective pats described in this chapter are only illustrative.

1.2.1 Configuration of supporting additional installation of disk array

There are three patterns of configurations of supporting additional installation of disk array.

1. Direct connection type

   The configuration in which the nodes and the disk array are directly connected without using an FC-SW. For maintaining the redundancy of the configuration, when directly connecting the node and the additionally installed disk array, connect two FC cables connected to the two FC ports in the node to the FC port of the different controller of the additionally installed disk array as shown in Figure 1.2.1-1 Direct connection type.

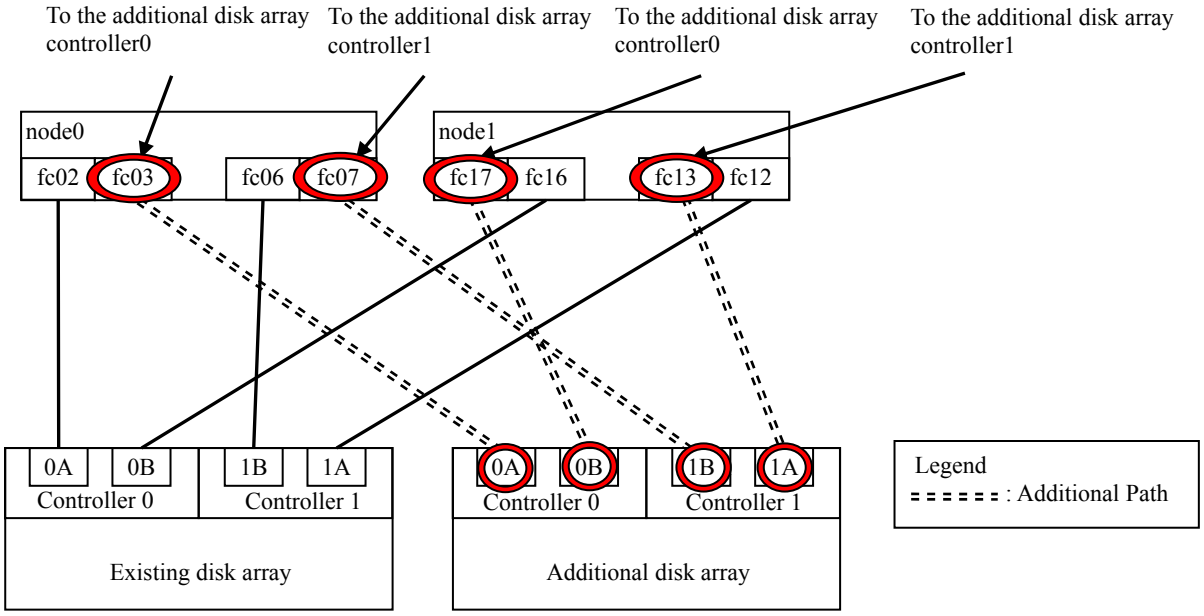

Figure 1.2.1-1 Direct Connection Type

Copyright © 2011, 2012, Hitachi, Ltd.

2. Existing Fibre Channel connection type

   For maintaining the redundancy of the configuration, when using FC switches, connect an FC cable to be connected to the different controller of the additionally installed disk array to a different FC switch as shown in Figure 1.2.1-2 FC connection type.

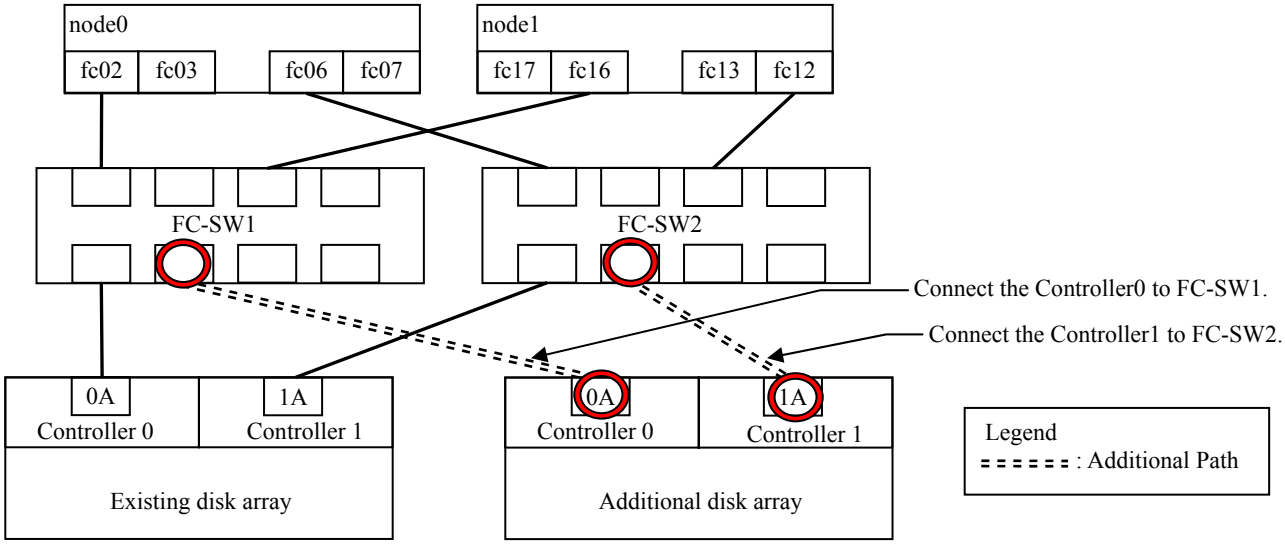

Figure 1.2.1-2 FC Connection Type

3. Additionally installed Fibre Channel connection type

   The configuration where the nodes and the disk array are connected via the additionally installed FC-SW. For maintaining the redundancy of the configuration, connect an FC cable to be connected to the different controller of the additionally installed disk array to a different FC switch as shown in Figure 1.2.1-3.

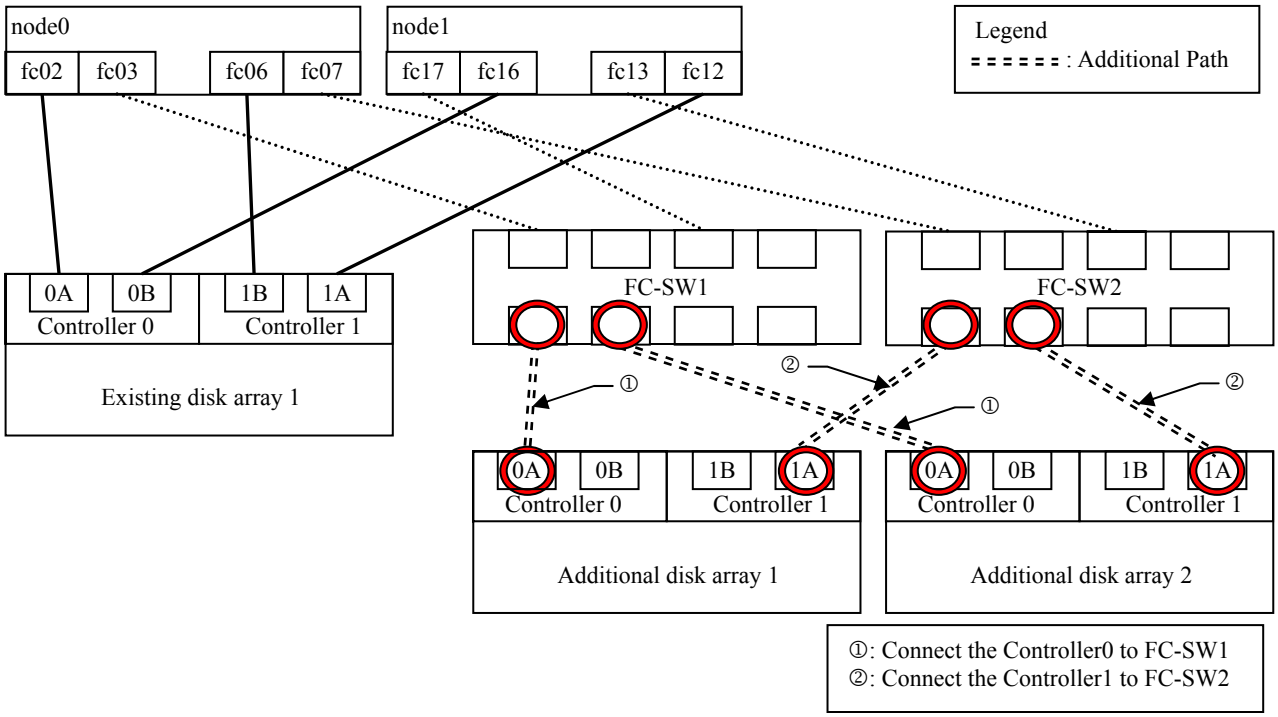

Figure 1.2.1-3 Additionally Installed Fibre Channel Connection Type

Copyright © 2011, Hitachi, Ltd.

1.2.2 Preconditions for additional disk array installation

For maintaining the redundancy of the cluster, ensure the configuration complies with the following 12 items as the preconditions for the FC connection of the nodes and the disk array (AMS2000 series, MSS, or HUS100 series).

1. The disk array can be additionally installed only if the existing disk array is the AMS2000 series, the MSS, or the HUS100 series. As for the additionally installed disk array, also, only the AMS2000 series, the MSS, or the HUS100 series is supported.

2. Before additionally installing the disk array, the setting on the disk array must be completed in accordance with the configuration instruction.
   If the setting on the disk array is not completed, request the system administrator.

3. The both nodes must be in the two-Fibre Channel card configuration in the direct connection type and the additional FC-SW connection type.

4. The OS version must be 3.0.0-XX or later.
   (Refer to "Maintenance Tool '2.34 Displaying the Version of the OS (versionlist)' (MNTT 02-2060)" for the configuration of the OS version.)
   If the OS version is not 3.0.0-XX or later, the OS version must be upgraded. Acquire the OS media via the support service or others and perform the upgrade installation.

5. The license key of the LUN Manager of the additionally installed disk array must be unlocked.
   (If the key is not unlocked, refer to "LUN Manager User's guide" and set the LUN Manager to "Enabled".)

6. Though the additional installation of the disk array can be performed in the status where the service is being continued, when the Fibre Channel card is Emulex HBA, perform failover for acquiring the WWN info of the FC ports in the node in the process of additional installation.

7. Ensure that the additional disk array installation is performed one by one.
   (If the second unit or later is to be additionally installed, perform the installation after the additional installation of the first unit is completed. At this step, the first unit becomes the "existing disk array".)

8. Up to one disk array can be additionally installed if the existing disk array is of the direct connection type and the existing FC-SW type.

9. Do not change the connection configuration of the FC ports for the existing disk array set for the node.

10. A free port is required in the FC-SW for additionally installing the disk array in the existing FC-SW connection type or in the additionally installed FC-SW connection type.

11. The change from the direct connection type to the existing FC-SW connection type and the change from the existing/additional FC-SW connection type to the direct connection type are not supported.

Copyright © 2011, 2012, Hitachi, Ltd.

12. In the cluster configuration, the user LUs must be mapped to ensure that two LU paths are set for each LU as seen from the node in the additional disk array (AMS2000 series, MSS, or HUS100 series). At this step, set the two paths for the respectively different controllers as shown in Fig. 1.2.2-1 Direct connection type (user LU mapping) for maintaining the redundancy.

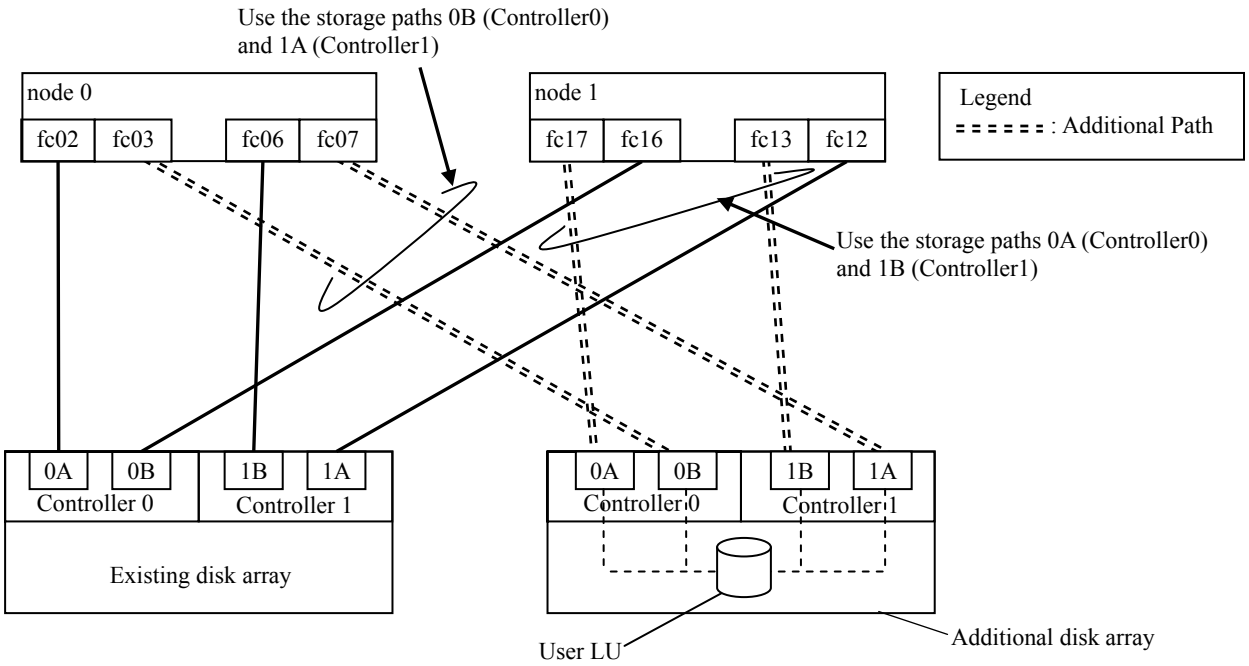

Figure 1.2.2-1 Direct Connection Type (User LU mapping)

The skeleton framework of increasing FC connection in case where a new disk array is additionally installed is shown below.

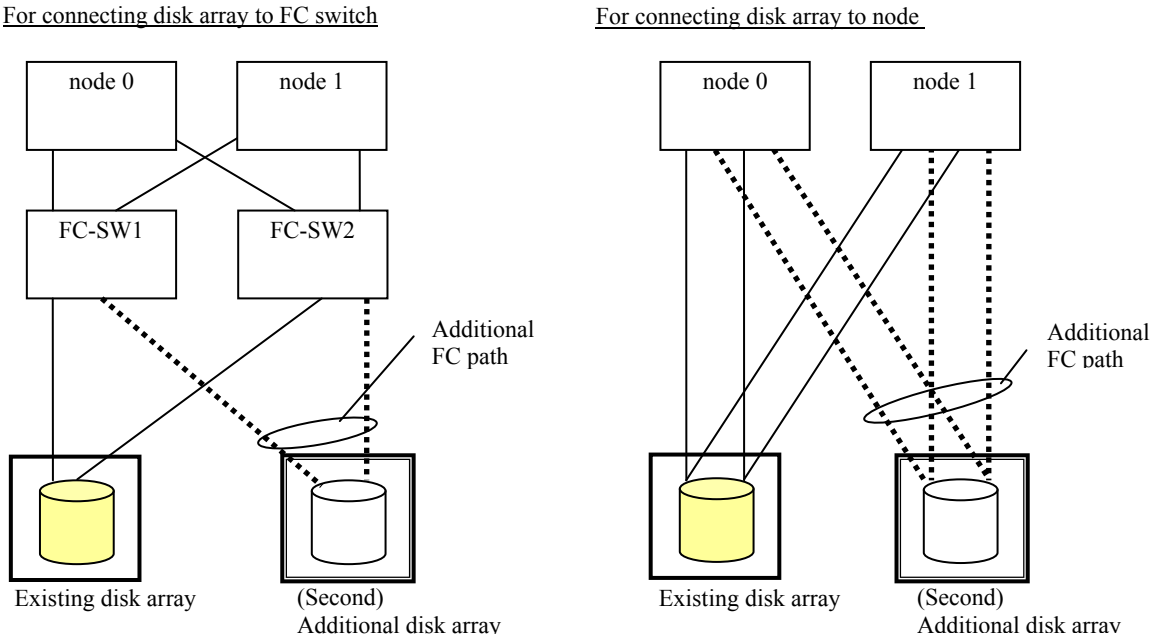

Figure 1.2.2-2 Image of Additional Installation of Disk Array

Copyright © 2011, 2012, Hitachi, Ltd.

1.2.3 Procedure overview of additional disk array installation

The procedure of newly installing a disk array is shown below.

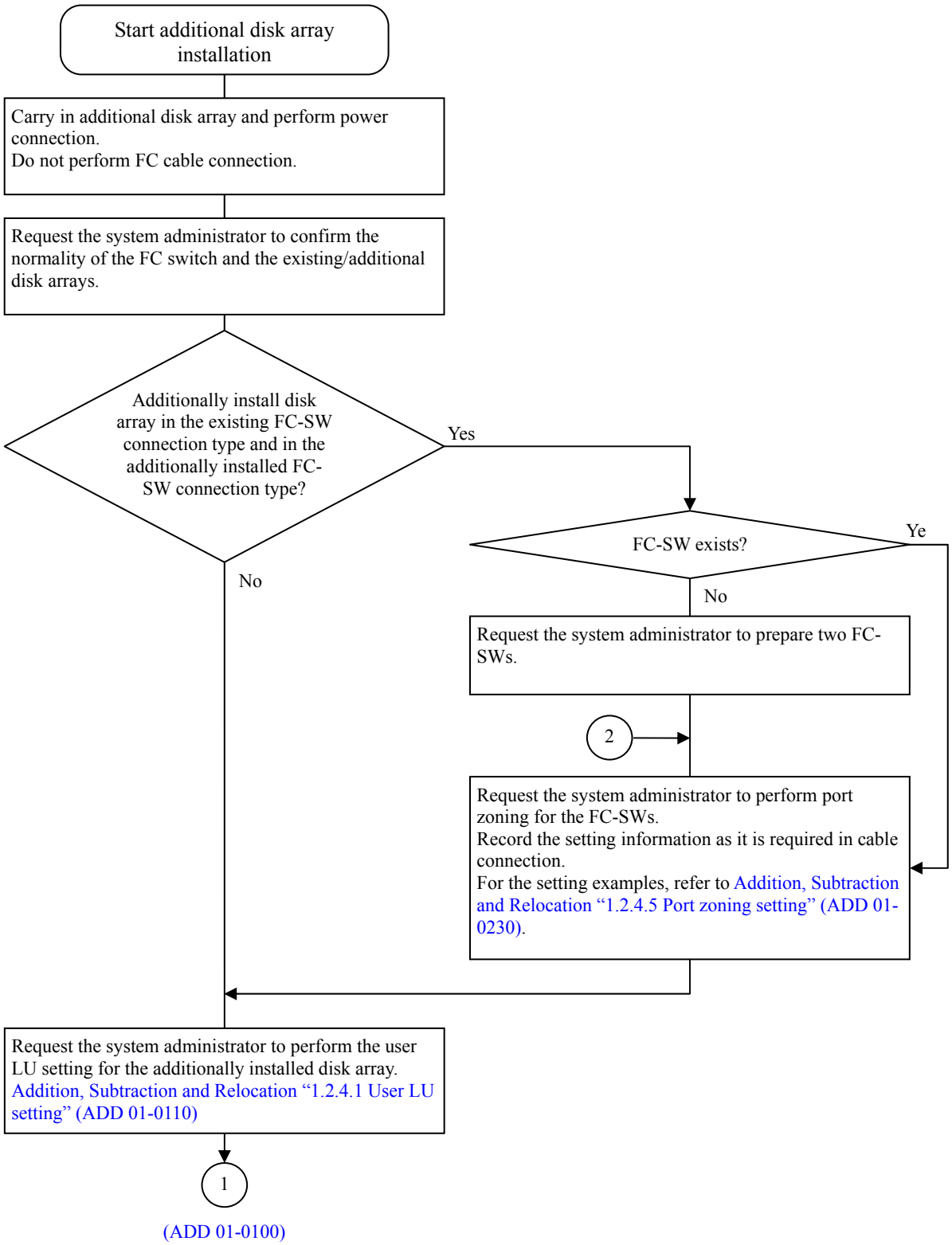

Figure 1.2.3-1 Procedure of Additional Disk Array Installation (1/2)

Copyright © 2011, Hitachi, Ltd.

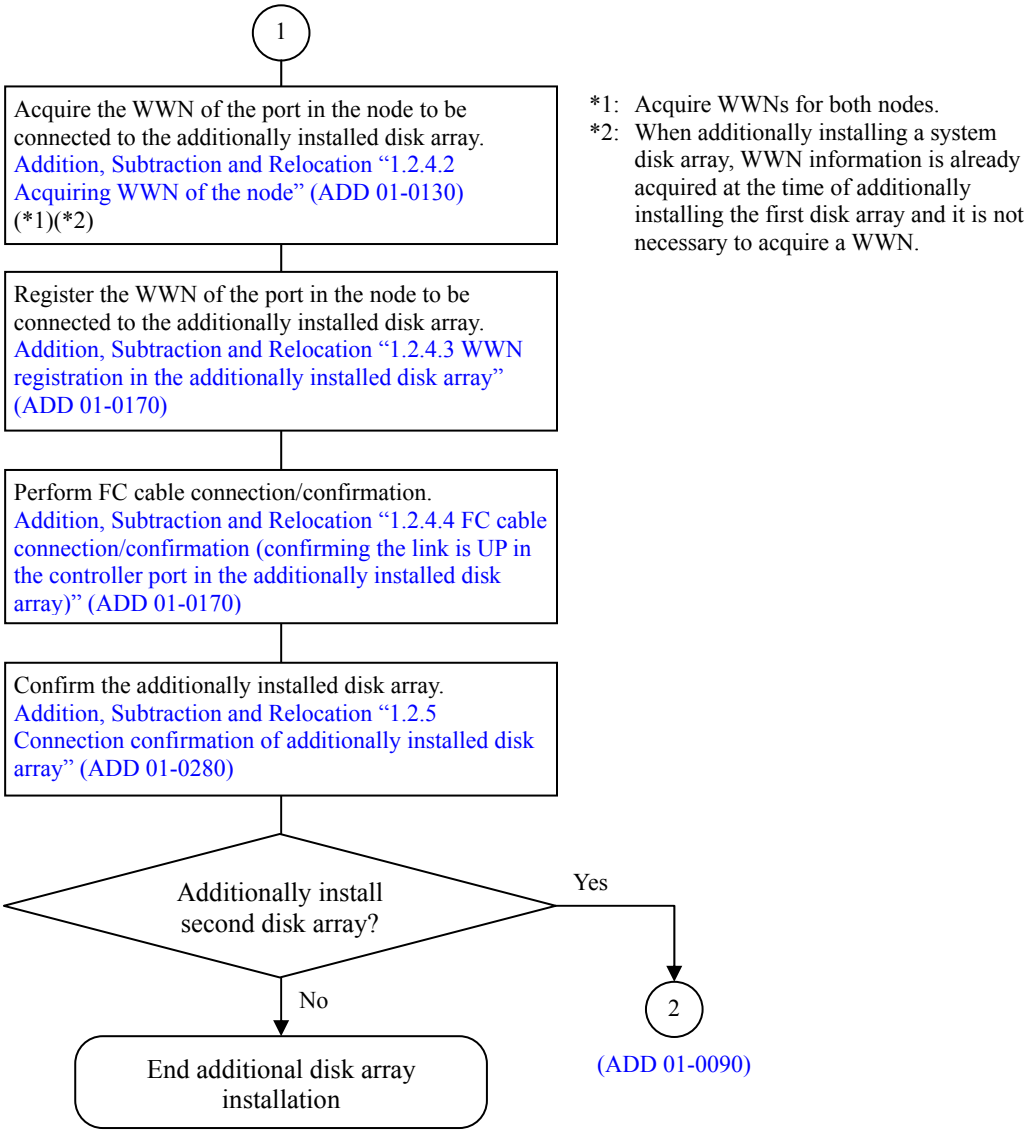

Figure 1.2.3-1 Procedure of Additional Disk Array Installation (2/2)

Copyright © 2011, Hitachi, Ltd.

1.2.4 Adding Disk Array

The setting and connection confirmation of a disk array to be additionally installed is performed in accordance with the procedure below.

NOTE: For creating an LU by using the DP pool, perform the processing by replacing the "RAID group" described in the procedure below by the "DP pool".

1.2.4.1 User LU setting

Request the system administrator to create a user LU for use in the node in the additionally installed disk array.

If a user LU is already planned, request to create the RAID group and the user LU complying with the plan.

If the user LU is already created, only request to perform (4) User LU confirmation.

(1) RAID group creation
Refer to “HSNM2 User’s Guide” and set the setting items of Table 1.2.4.1-1.

Table 1.2.4.1-1 Setting and Confirming RAID Group

No.	Item		Details on setting/confirmation
1	RAID group		Set two RAID groups. (The number of RAID groups is arbitrary.)
2	RAID level		Set RAID1, RAID5, or RAID6 as the RAID level of the RAID group to which user LUs are assigned.
3	Drive configuration	Drive type	Use an SATA, an SAS, SAS7.2K or an SSD.
4		Number of parity groups	Create one fixed parity group.

(2) Logical unit (LU) creation
Refer to “HSNM2 User’s Guide” and create a logical unit (LU).
If the user LU is already planned, create the RAID group and the user LU of the capacity complying with the plan.
At least one or more user LUs should be created to recognize the disk array. Up to 511 (256 for OS version 4.2.1-XX and earlier) user LUs can be created on the entire system (existing/additionally installed disk array).

If a command device is used for the existing disk array or the additional disk array, the number of user LUs which can be created in the entire system is the number ascertained by subtracting the number of command devices (the number of command devices in the existing disk array and the number of command devices in the additional command device) from 255.

Copyright © 2011, 2016, Hitachi, Ltd.

(3) Logical unit formatting
Format the logical unit created in the additionally installed disk array.
Refer to “HSNM2 User’s Guide” and perform the formatting, and confirm the completion.

(4) User LU confirmation
Confirm the user LU created in the additionally installed disk array.
Refer to “HSNM2 User’s Guide” and confirm the user LUs set in the additional disk array.

(5) Setting/Confirming system parameter
Refer to “Disk Setting ‘2.4 Setting and Confirming System Parameters’ (DSKST 02-0110)” and perform the setting /confirmation of the system parameter.

(6) User LU mapping
Refer to “HSNM2 User’s Guide” and map the user LU created in the additionally installed disk array subsystem which is set for the disk array subsystem to the FC port.
However, the LU which is mapped to the H-LUN0 (host LUN0) must exist.
If the LU mapped to the H-LUN0 does not exist, map one of the command devices or the user LUs. If the LU mapped to the H-LUN0 exists, mapping to the H-LUN0 is not necessary.

Copyright © 2011, Hitachi, Ltd.

1.2.4.2 Acquiring WWN of the node

When the Fibre Channel card is Emulex HBA, refer to 1.2.4.2.1 In the case of Emulex HBA. When it is Hitachi HBA, refer to Addition, Subtraction and Relocation "1.2.4.2.2 In the case of Hitachi HBA" (ADD 01-0161.)

1.2.4.2.1 In the case of Emulex HBA

Acquire the WWN of the node which is set for HBA BIOS from the KVM console. Note that this operation must be performed for one node at a time while switching the console.
For the KVM connection, refer to "Set Up '1.2 Confirmation of KVM Connection' (SETUP 01-0010)".
Perform failover the target node and terminate the node.
In addition, list numbers on HBABIOS display to acquire WWN differs depending on the configuration. Refer to Table 1.2.4.2.1-1 List Numbers on HBABIOS Display to Acquire WWN.

Table 1.2.4.2.1-1 below describes examples of FC ports and List numbers in the configurations shown in Figure 1.2.1-1, Figure 1.2.1-2, and Figure 1.2.1-3.

Table 1.2.4.2.1-1 List Numbers on HBABIOS Display to Acquire WWN

Configuration		FC port to acquire WWN	Port name in Figure 1.2.1-x	List number on HBABIOS display
Direct connection type	Node 0	fc0007	fc07	List number "2"
		fc0003	fc03	List number "4"
	Node 1	fc0007	fc17	List number "2"
		fc0003	fc13	List number "4"
Existing FC-SW connection type	Node 0	fc0006	fc06	List number "1"
		fc0002	fc02	List number "3"
	Node 1	fc0006	fc16	List number "1"
		fc0002	fc12	List number "3"
Additional FC-SW connection type	Node 0	fc0007	fc07	List number "2"
		fc0003	fc03	List number "4"
	Node 1	fc0007	fc17	List number "2"
		fc0003	fc13	List number "4"

Copyright © 2011, 2015, Hitachi, Ltd.

(a) Acquire a WWN for the port of the node to be connected to the additional disk array subsystem by referring to "B.5.1 Acquiring WWNs of Nodes." Write it down in the worksheet below. Note that the worksheet to write down WWN is different for each model.

Table 1.2.4.2.1-3 Example of Writing Worksheet for Memo of WWN (RS220xK)

Port No. for WWN to be acquired	List No.1 (*1)	List No.2 (*2)	List No.3 (*3)	List No.4 (*4)
Display on the OS	fc0006	fc0007	fc0002	fc0003
node0				
node1				

*1: This corresponds to the port "fc0006" in 'Figure A.2.2.2-1 Rear View of the Node (Example.)'
*2: This corresponds to the port "fc0007" in 'Figure A.2.2.2-1 Rear View of the Node (Example.)'
*3: This corresponds to the port "fc0002" in 'Figure A.2.2.2-1 Rear View of the Node (Example.)'
*4: This corresponds to the port "fc0003" in 'Figure A.2.2.2-1 Rear View of the Node (Example.)'

NOTE: If HBA is installed in expansion slot 2 and expansion slot 4, the corresponding port of List No.1 is "fc0006," that of List No.2 is "fc0007," List No.3 is "fc0002," and List No.4 is "fc0003." However, when HBA is installed only in expansion slot 2, List No.1 is "fc0002" and List No.2 is "fc0003."

Table 1.2.4.2.1-4 Example of Writing Worksheet for Memo of WWN (CR210HM)

Port No. for WWN to be acquired	List No.1 (*1)	List No.2 (*2)	List No.3 (*3)	List No.4 (*4)
Display on the OS	fc0005	fc0004		
node0				
node1				

*1: This corresponds to the port "fc0005" in 'Figure A.2.2.2-1 Rear View of the Node (Example.)'
*2: This corresponds to the port "fc0004" in 'Figure A.2.2.2-1 Rear View of the Node (Example.)'

Copyright © 2011, 2015, Hitachi, Ltd.

This page is for editorial purpose only.

Copyright © 2011, 2012,Hitachi, Ltd.

(b) Once the OS has rebooted, request the system administrator to set the “Node Status” of the node to “UP” and shift (failback) the resource group which is failed over to the node.
For the reference place in User’s Guide describing the details about starting a node, refer to “General ‘Reference Place in User's Guide for Operating Procedures Table 4 ‘Stopping and starting a node’’ (GENE 00-0040)”, and for the reference place in User’s Guide describing the details about failover/failback of a resource group, refer to “General ‘Reference Place in User's Guide for Operating Procedures Table 4 ‘Changing the execution node of a resource group’’ (GENE 00-0040)”.
However, if the system administrator is not present, the maintenance personnel must contact the system administrator, acquire the permission for performing the above operation and perform the operation.
Refer to “Maintenance Tool ‘3.2 Failback and Start of Node after Starting the OS’ (MNTT 03-0030)” for the procedure of performing the operation.

(c) As for the confirmation of the failback, refer to “Maintenance Tool ‘2.2 Displaying the Cluster Status (clstatus) Table 2.2.2 Cluster status to be used for the confirmation when the maintenance is in progress’ (MNTT 02-0051)” and confirm that the status is as shown by item 1.

(d) If a WWN is acquired in the node 0, similarly perform the processing from (a) to (c) in the node 1.

Copyright © 2011, 2015, Hitachi, Ltd.

1.2.4.2.2 In the case of Hitachi HBA

Acquire WWN for the FC port.

(1) Confirm WWN for the FC port. Check the FC port of the node to be connected to the additionally installed disk array subsystem and write down the WWN that corresponds to the FC port in the worksheet below.

NOTE:
- WWN for “PORT 0” (a 16-digit hexadecimal number: 5000xxxx xxxxxxxx) is labeled on the side of the Fibre Channel cable inlet.
- WWN for “PORT 1” can be calculated by adding 2 to the WWN for “PORT 0.” (e.g., when WWN for “PORT 0” is “5000xxxx xxxx0A29,” WWN for “PORT 1” is “5000xxxx xxxx0A2B.”)
- A port of smaller port name is “PORT 0.” (e.g., when the port names are fc0002 and fc0003, fc0002 is “PORT 0.”)

Table 1.2.4.2.2-1 Example of Writing Worksheet for Memo of WWN (CR210HM)

Display on OS	fc0004 (*1)	fc0005 (*2)
node0		
node1		

*1: This corresponds to the port “fc0004” in ‘Figure A.2.2.2-1 Rear View of the Node (Example.)’
*2: This corresponds to the port “fc0005” in ‘Figure A.2.2.2-1 Rear View of the Node (Example.)’

(2) If you acquired the WWN on node0, perform step (1) on node1 as well.

Copyright © 2012, Hitachi, Ltd.

1.2.4.3 WWN registration in the additionally installed disk array

Refer to “LUN Manager User’s Guide” and register the WWN for the FC port of the node to be connected to the additional disk array subsystem recorded in Addition, Subtraction and Relocation “1.2.4.2 Acquiring WWN of the node” (ADD 01-0130) on the additional disk array subsystem.

1.2.4.4 FC cable connection/confirmation (confirming the link is UP in the controller port in the additionally installed disk array)

(1) Connect the additional disk array by the FC cables in accordance with the configuration instruction.
The configuration examples corresponding to the respective forms of additional installation are shown below.

(a) In existing FC switch connection: when two controller ports in the additionally installed disk array are used

Existing FC switch connection type (using two controller ports of the additional disk array)

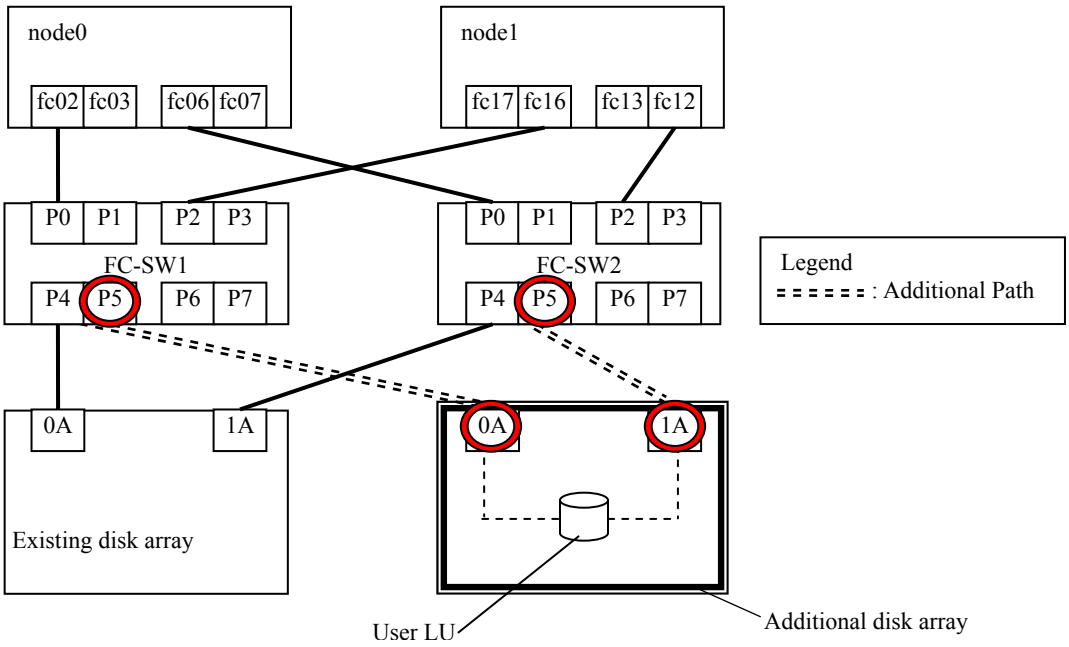

Figure 1.2.4.4-1 FC Cable Connection in the Additional Disk Array (Existing FC switch connection type)

Copyright © 2011, 2012, Hitachi, Ltd.

(b) In existing FC-SW connection: when four controller ports in the additionally installed disk array are used

Existing FC switch connection type (using four controller ports of the additional disk array)

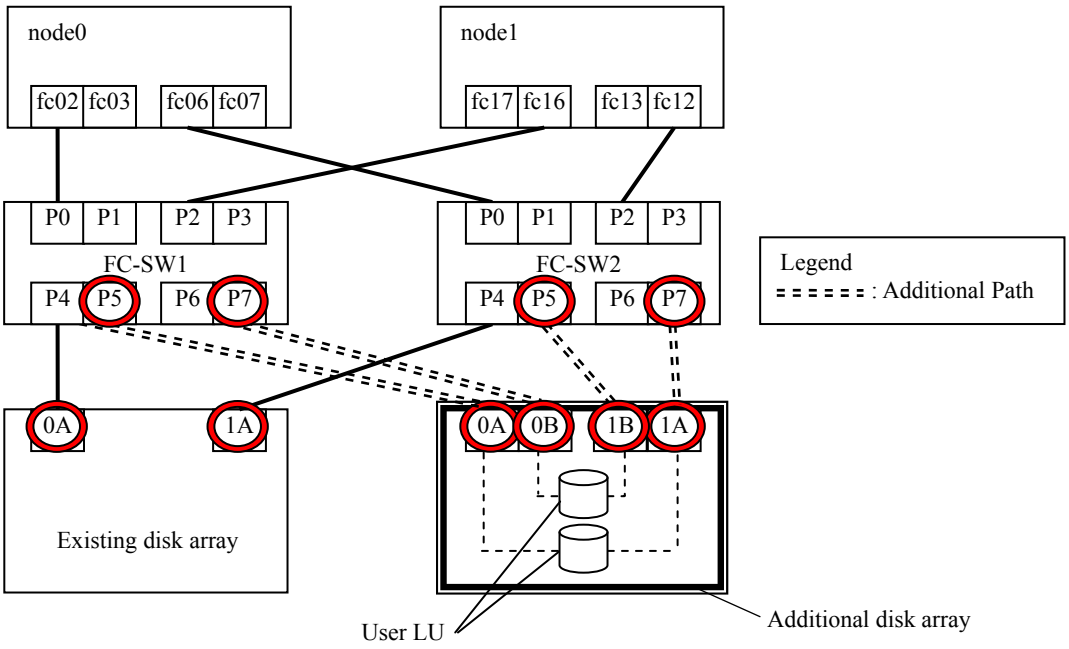

Figure 1.2.4.4-2 FC Cable Connection in the Additional Disk Array (Existing FC switch connection type)

Copyright © 2011, Hitachi, Ltd.

(c) In direct connection: when four controller ports in the additionally installed disk array are used

Existing disk array direct connection type (using four controller ports of the additional disk array)

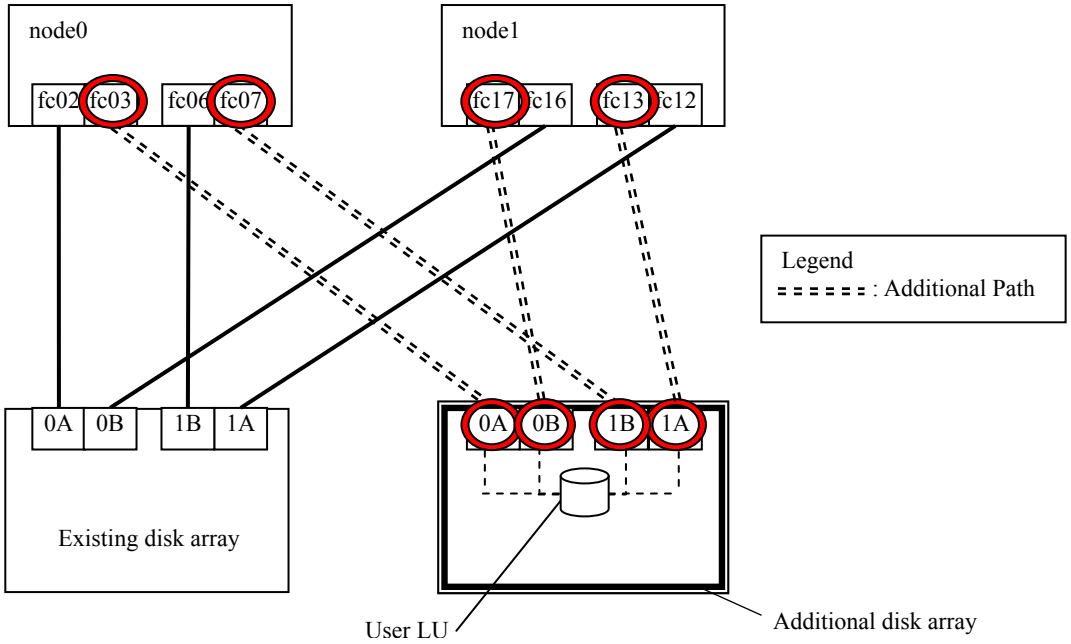

Figure 1.2.4.4-3 FC Cable Connection in the Additional Disk Array (Direct connection type)

Copyright © 2011, Hitachi, Ltd.

(d) In additional FC-SW connection: when two controller ports in the additionally installed disk array are used

Additional FC switch connection type (using two controller ports in each additional disk array)

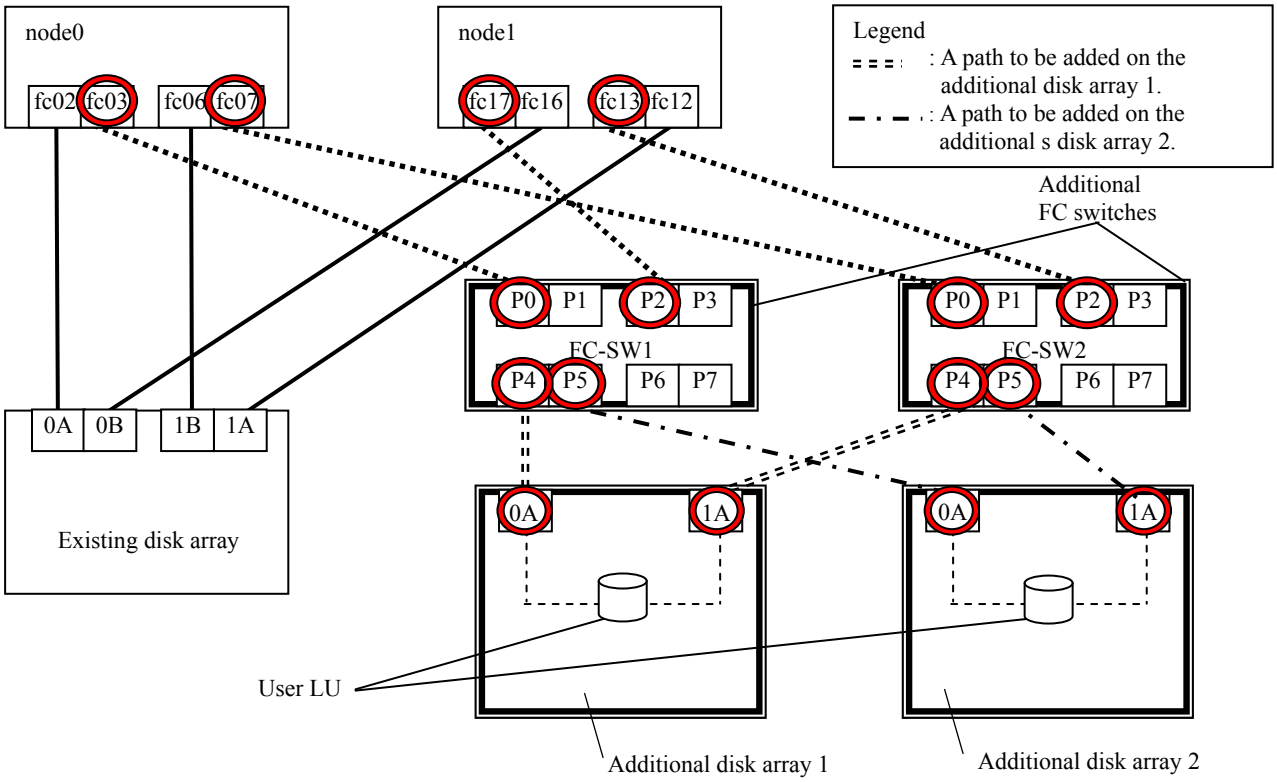

Figure 1.2.4.4-4 FC Cable Connection in the Additional Disk Array (Additional FC switch connection type)

Copyright © 2011, Hitachi, Ltd.

(e) In additional FC-SW connection: when four controller ports in the additionally installed disk array are used

Additional FC switch connection type (using four controller ports in each additional disk array)

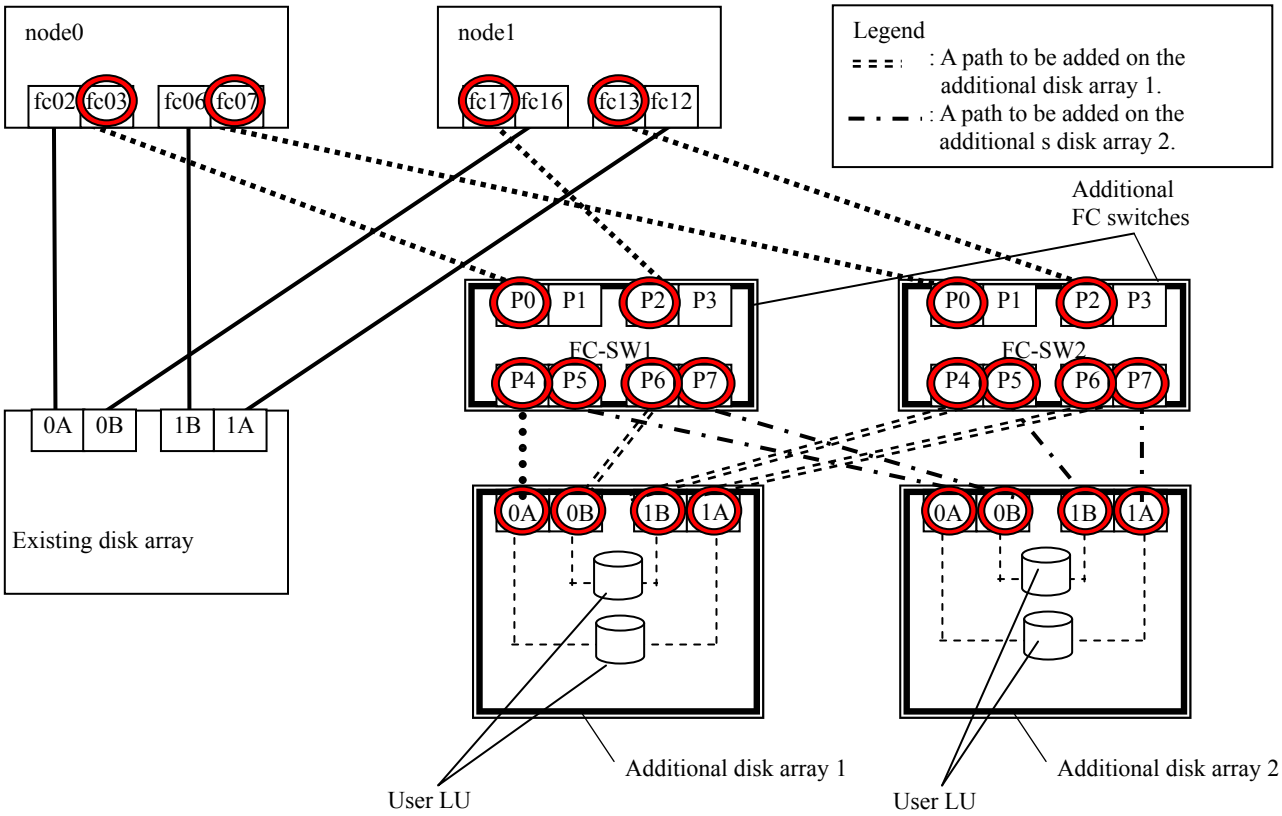

Figure 1.2.4.4-5 FC Cable Connection in the Additional Disk Array (Additional FC switch connection type)

Copyright © 2011, 2016, Hitachi, Ltd.

(2) After connecting the FC cables, confirm that the controller ports in the additionally installed disk array are linked up.
In addition, confirm the link-up confirmation of the additionally installed disk array with reference to the maintenance manual of the relevant disk array or the user's guide.
In case of the existing disk array connection type, proceed to Addition, Subtraction and Relocation "1.2.5 Connection confirmation of additionally installed disk array" (ADD 01-0280).
In case of the FC switch connection type, proceed to the procedure (3).

(3) In case of the FC switch connection type, after confirming the FC-SW1 and the FC-SW2 are linked up, proceed to Addition, Subtraction and Relocation "1.2.5 Connection confirmation of additionally installed disk array" (ADD 01-0280).

Copyright © 2011, Hitachi, Ltd.

1.2.4.5 Port zoning setting

Ask the system administrator to performing port zoning.

(a) In existing FC-SW connection: when two controller ports in the additionally installed disk array are used

Existing FC-switch connection type: using two controller ports in the additional disk array

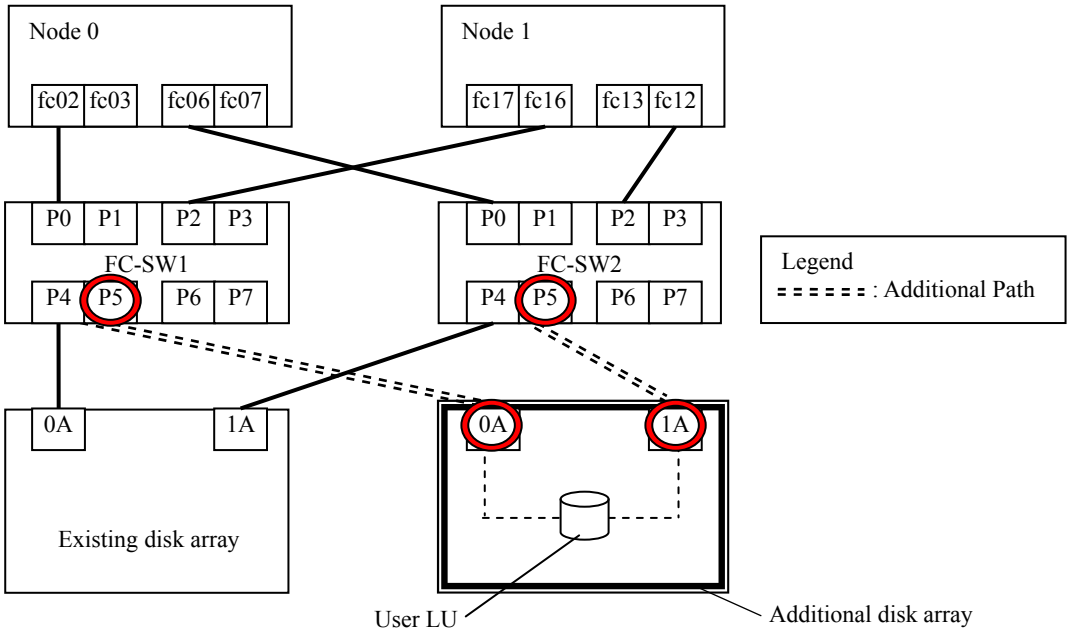

Figure 1.2.4.5-1 FC Cable Connection of Additionally Installed Disk Array (existing FC switch connection type)

The port zoning setting corresponding to the figure above is shown below.

For FC-SW1 (P0-P5, P2-P5) Perform the zoning setting to connect these two ports.
* Px: Port of FC switch

For FC-SW2 (P0-P5, P2-P5) Perform the zoning setting to connect these two ports.
* Px: Port of FC switch

Copyright © 2011, Hitachi, Ltd.

(b) In existing FC-SW connection: when four controller ports in the additionally installed disk array are used

Existing FC-switch connection type: using four controller ports in the additional disk array

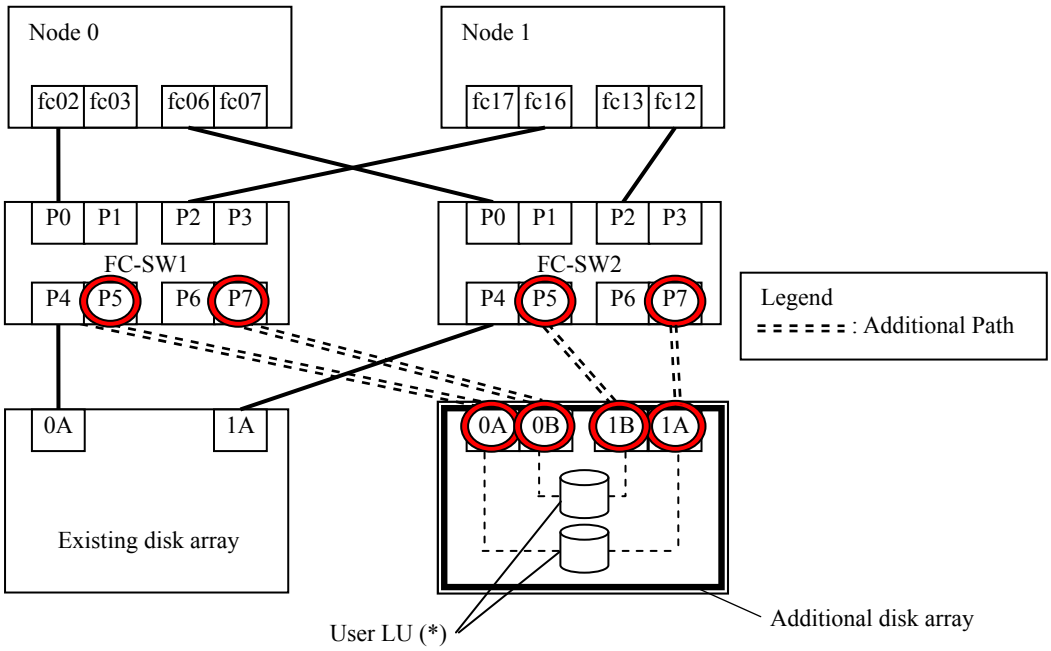

Figure 1.2.4.5-2 FC Cable Connection of Additionally Installed Disk Array (existing FC switch connection type)

*: The user LU under 0A-1A and the user LU under 0B-1B are different user LUs.

The port zoning setting corresponding to the figure above is shown below.

For FC-SW1

P0-P5
P2-P5
P0-P7
P2-P7

Perform the zoning setting to connect these two ports.
*Px: Port of FC switch

For FC-SW2

P0-P5
P2-P5
P0-P7
P2-P7

Perform the zoning setting to connect these two ports.
*Px: Port of FC switch

Copyright © 2011, Hitachi, Ltd.

(c) In additional FC-SW connection: when two controller ports in the additionally installed disk array are used

Additional FC-switch connection type (using two controller ports in each of the additional disk arrays)

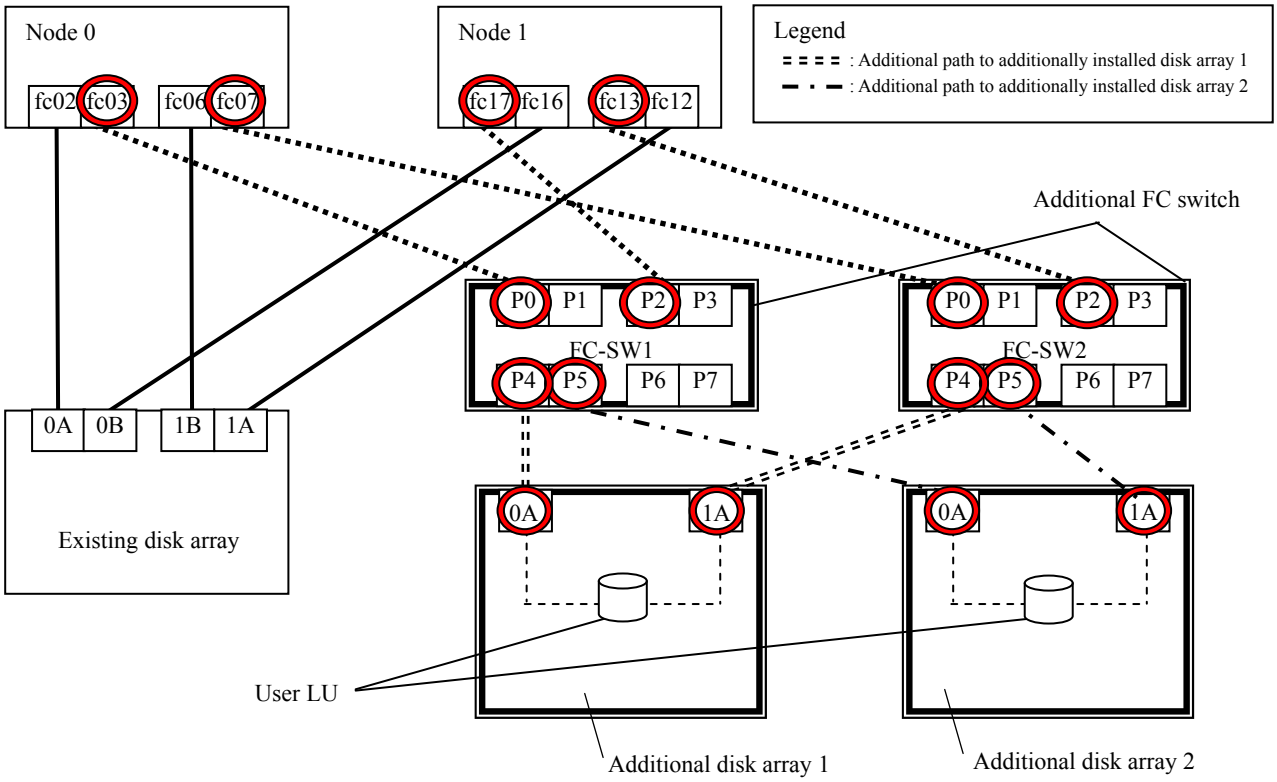

Figure 1.2.4.5-3 FC Cable Connection of Additionally Installed Disk Array (additional FC switch connection type)

The port zoning setting corresponding to the figure above is shown below.

(Setting for additional disk array 1)

For FC-SW1 (P0-P4, P2-P4) Perform the zoning setting to connect these two ports.
* Px: Port of FC switch

For FC-SW2 (P0-P4, P2-P4) Perform the zoning setting to connect these two ports.
* Px: Port of FC switch

(Setting for additional disk array 2)

For FC-SW1 (P0-P5, P2-P5) Perform the zoning setting to connect these two ports.
* Px: Port of FC switch

For FC-SW2 (P0-P5, P2-P5) Perform the zoning setting to connect these two ports.
* Px: Port of FC switch

Copyright © 2011, Hitachi, Ltd.

(d) In additional FC-SW connection: when four controller ports in the additionally installed disk array are used

Additional FC-switch connection type (using four controller ports in each of the additional disk arrays)

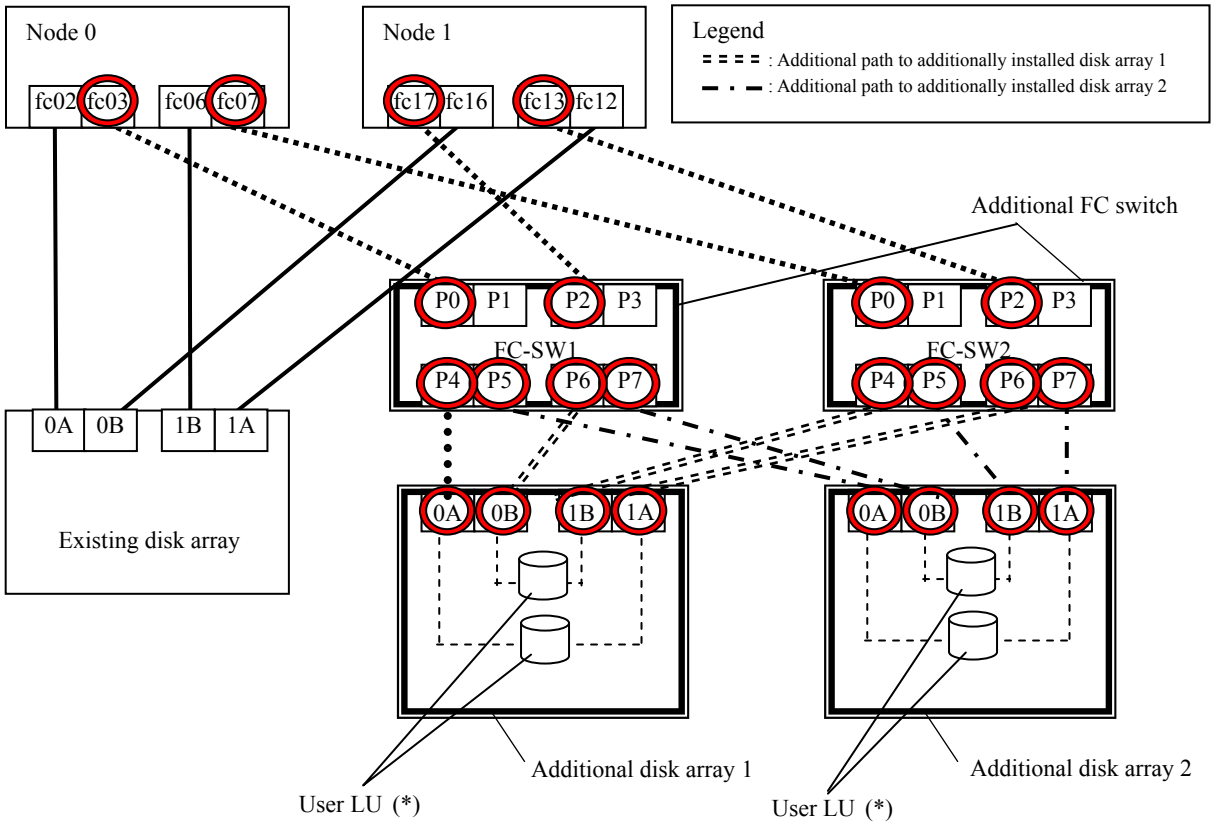

Figure 1.2.4.5-4 FC Cable Connection of Additionally Installed Disk Array (additional FC switch connection type)

*: The user LU under 0A-1A and the user LU under 0B-1B are different user LUs.

Copyright © 2011, Hitachi, Ltd.

The port zoning setting corresponding to Figure 1.2.4.5-4 is shown below.

(Setting for additional disk array 1)

For FC-SW1

P0-P4
P2-P4
P0-P6
P2-P6

Perform the zoning setting to connect these two ports.
* Px: Port of FC switch

For FC-SW2

P0-P4
P2-P4
P0-P6
P2-P6

Perform the zoning setting to connect these two ports.
* Px: Port of FC switch

(Setting for additional disk array 2)

For FC-SW1

P0-P5
P2-P5
P0-P7
P2-P7

Perform the zoning setting to connect these two ports.
* Px: Port of FC switch

For FC-SW2

P0-P5
P2-P5
P0-P7
P2-P7

Perform the zoning setting to connect these two ports.
* Px: Port of FC switch

Copyright © 2011, Hitachi, Ltd.

1.2.5 Connection confirmation of additionally installed disk array

Perform the connection confirmation operation in accordance with the flow below.

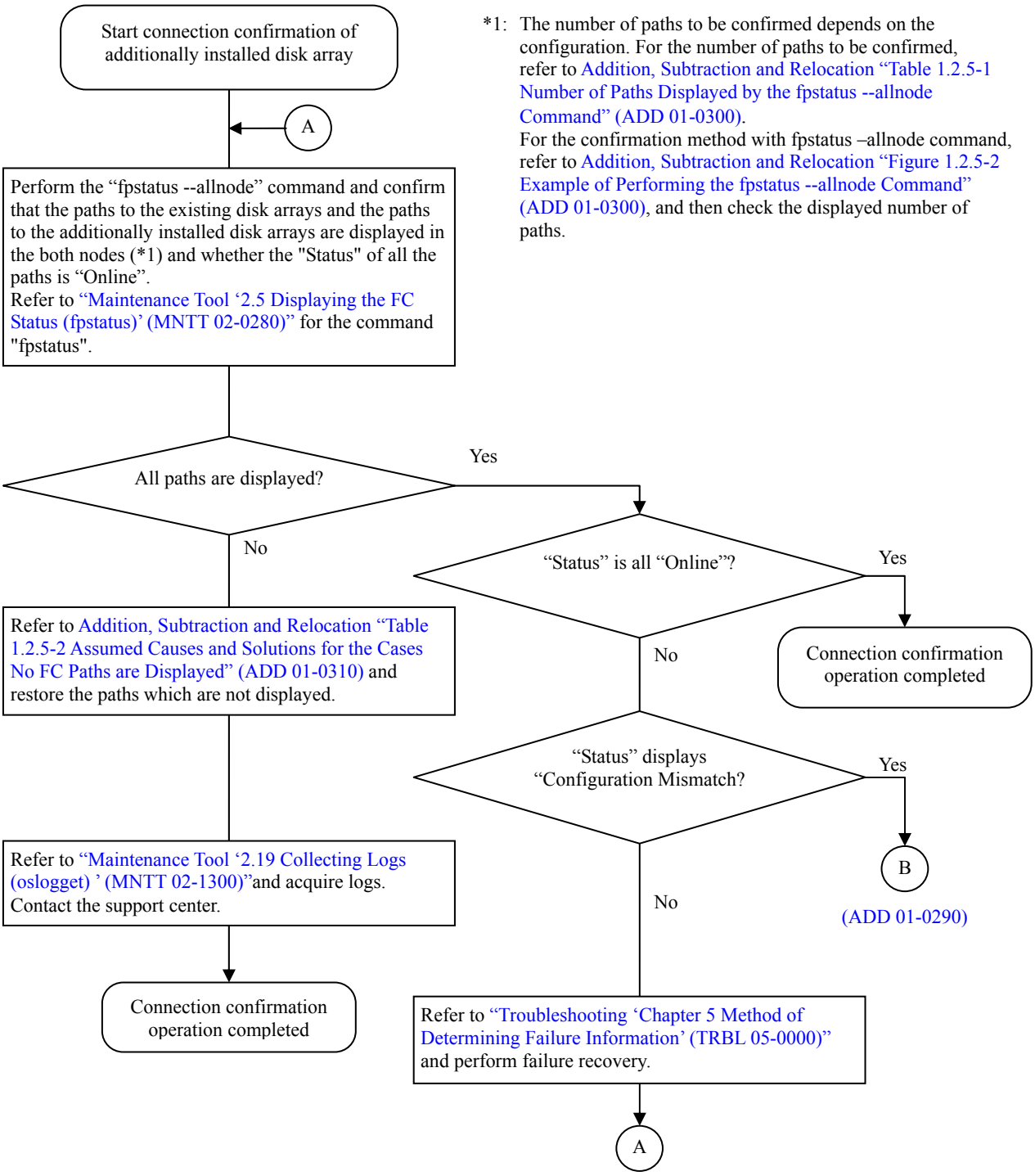

*1: The number of paths to be confirmed depends on the configuration. For the number of paths to be confirmed, refer to Addition, Subtraction and Relocation “Table 1.2.5-1 Number of Paths Displayed by the fpstatus --allnode Command” (ADD 01-0300).
For the confirmation method with fpstatus –allnode command, refer to Addition, Subtraction and Relocation “Figure 1.2.5-2 Example of Performing the fpstatus --allnode Command” (ADD 01-0300), and then check the displayed number of paths.

Figure 1.2.5-1 Flow of Connection Confirmation of Additionally Installed Disk Array (1/2)

Copyright © 2011, 2012, Hitachi, Ltd.

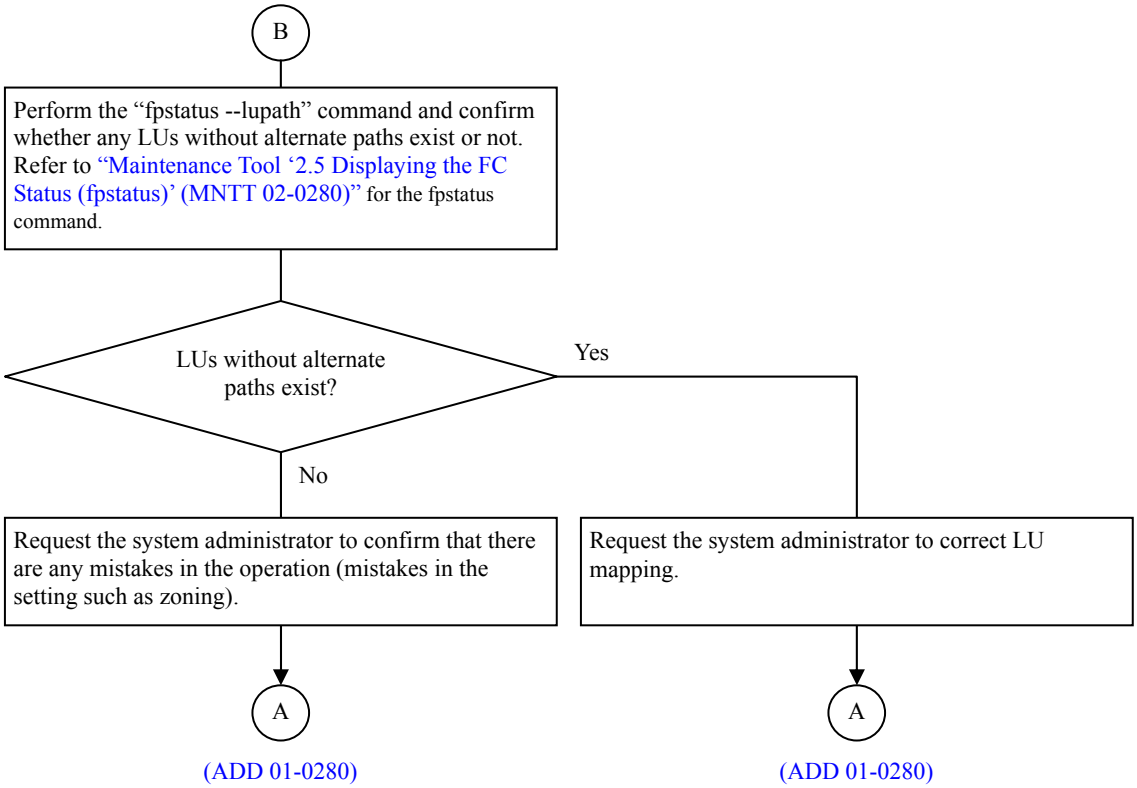

Figure 1.2.5-1 Flow of Connection Confirmation of Additionally Installed Disk Array (2/2)

Copyright © 2011, Hitachi, Ltd.

Table 1.2.5-1 Number of Paths Displayed by the fpstatus --allnode Command

Configuration	Number of paths in the existing disk array	Number of paths in the additional disk array
Addition, Subtraction and Relocation "Figure 1.2.4.4-1 FC Cable Connection in the Additional Disk Array (Existing FC switch connection type)" (ADD 01-0170)	4	4
Addition, Subtraction and Relocation "Figure 1.2.4.4-3 FC Cable Connection in the Additional Disk Array (Direct connection type)" (ADD 01-0190)		
Addition, Subtraction and Relocation "Figure 1.2.4.4-4 FC Cable Connection in the Additional Disk Array (Additional FC switch connection type)" (ADD 01-0200) (*1)		
Addition, Subtraction and Relocation "Figure 1.2.4.4-2 FC Cable Connection in the Additional Disk Array (Existing FC switch connection type)" (ADD 01-0180)		8
Addition, Subtraction and Relocation "Figure 1.2.4.4-4 FC Cable Connection in the Additional Disk Array (Additional FC switch connection type)" (ADD 01-0200) (*2)		
Addition, Subtraction and Relocation "Figure 1.2.4.4-5 FC Cable Connection in the Additional Disk Array (Additional FC switch connection type)" (ADD 01-0210)(*1)		
Addition, Subtraction and Relocation "Figure 1.2.4.4-5 FC Cable Connection in the Additional Disk Array (Additional FC switch connection type)" (ADD 01-0210)(*2)		16

*1: In case of only one additional disk array.
*2: In case of two additional disk arrays.

```
fpstatus --allnode output format
node 0(DJ8RMPBX)
Path                Target   HostPort  HostPortWWN        ArrayPort  ArrayPortWWN       Model  Serial     Status
path000-0002-0A     N0-T000  fc0002    10000000c98a9f2e   0A         50060e801024e8e0   AMS    85010110   Online   ①
path000-0006-1B     N0-T000  fc0006    10000000c98db65a   1B         50060e801024e8e6   AMS    85010110   Online
path001-0002-0A     N0-T001  fc0002    10000000c98f8f2e   0A         50060e80102448e0   AMS    87012340   Online   ②
path001-0006-1B     N0-T001  fc0006    10000000c98ed65a   1B         50060e80102448e6   AMS    87012340   Online

node 1(D79RMPDX)
Path                Target   HostPort  HostPortWWN        ArrayPort  ArrayPortWWN       Model  Serial     Status
path000-0006-0B     N1-T000  fc0006    10000000c98bb92e   0B         50060e801064d9e0   AMS    85010110   Online   ③
path000-0002-1A     N1-T000  fc0002    10000000c98ccb5a   1A         50060e801064d9e6   AMS    85010110   Online
path001-0006-0B     N1-T001  fc0006    10000000c98a012e   0B         50060e80106449d0   AMS    87012340   Online   ④
path001-0002-1A     N1-T001  fc0002    10000000c98d985a   1A         50060e80106449d6   AMS    87012340   Online
```

Figure 1.2.5-2 Example of Performing the fpstatus --allnode Command

The figure above is an example of performing the fpstatus --allnode command in the configuration shown in Addition, Subtraction and Relocation "Figure 1.2.4.4-3 FC Cable Connection in the Additional Disk Array (Direct connection type)" (ADD 01-0190).

① in the figure indicates that the number of paths from the node 0 to the existing disk array subsystem is two.

② in the figure indicates that the number of paths from the node 0 to the additional disk array subsystem is two.

③ in the figure indicates that the number of paths from the node 1 to the existing disk array subsystem is two.

④ in the figure indicates that the number of paths from the node 1 to the additional disk array subsystem is two.

Copyright © 2011, 2012, Hitachi, Ltd.

Table 1.2.5-2 Assumed Causes and Solutions for the Cases No FC Paths are Displayed

Assumed cause	Solution
① The order of FC cable connection might be wrong.	① Disconnect the FC cable from the port of the additionally installed disk array, and then connect it again. • If the problem is not solved, perform the assumed cause②.
② The FC cable connection might be wrong. In the direct connection type: The cable connection between the node and the disk array subsystem might be wrong. In the existing disk array type and the additionally installed disk array type: The cable connection between the node and the FC-SW might be wrong or the cable connection between the FC-SW and the disk array subsystem might be wrong.	② Confirm with the configuration instruction that the cable connection is correct. • If no mistake is found, confirm with the assumed cause③. • If any mistakes are found, reconnect the cables and perform Addition, Subtraction and Relocation "Figure 1.2.5-1 Flow of Connection Confirmation of Additionally Installed Disk Array (1/2)" (ADD 01-0280).
③ The contents of the WWN registration of the disk array subsystem might be wrong.	③ Confirm that there is no difference between the WWN information registered in the disk array subsystem and the WWN acquired in Addition, Subtraction and Relocation 1.2.4.2 Acquiring WWN of the node)" (ADD 01-0130) . • If no difference is found, confirm with the assumed cause④. • If any differences are found, register the WWN again and perform Addition, Subtraction and Relocation "Figure 1.2.5-1 Flow of Connection Confirmation of Additionally Installed Disk Array (1/2)" (ADD 01-0280).
④ The port zoning for the connection port among the FC-SW might be wrong.	④ Confirm with the system administrator that the port zoning is correct. • If any mistakes are found as a result of the port zoning confirmation by the system administrator and the port zoning is corrected, perform Addition, Subtraction and Relocation "Figure 1.2.5-1 Flow of Connection Confirmation of Additionally Installed Disk Array (1/2)" (ADD 01-0280). • If no mistakes are found as a result of the port zoning confirmation by the system administrator, perform the subsequent procedure in Addition, Subtraction and Relocation "Figure 1.2.5-1 Flow of Connection Confirmation of Additionally Installed Disk Array (1/2)" (ADD 01-0280).

Copyright © 2011, 2014, Hitachi, Ltd.

1.3 Additional Drive Installation

NOTE: The procedures described in this section are applicable to CR220SM, and D51B-2U.

With the procedures, you can additionally install an internal drive on the node and confirm that the installed drive is recognized by the OS properly.

1.3.1 Preconditions for additional drive installation

- Perform an additional drive installation with the service stopped.
- The required OS version of the node is 4.0.0-XX or later.
  For how to check the OS version, refer to "Maintenance Tool '2.34 Displaying the Version of the OS (versionlist)' (MNTT 02-2060.)"
- On the front drive, different drive types are not supported, so SSD cannot be mixed with HDD on D51B-2U. Upgrades are supported to go from 6 drives to 12 drives but can only be performed with the same type and size of drive for the additional 6 units.

1.3.2 Procedure overview of additional drive installation

The following shows the overview of the additional drive installation procedures.

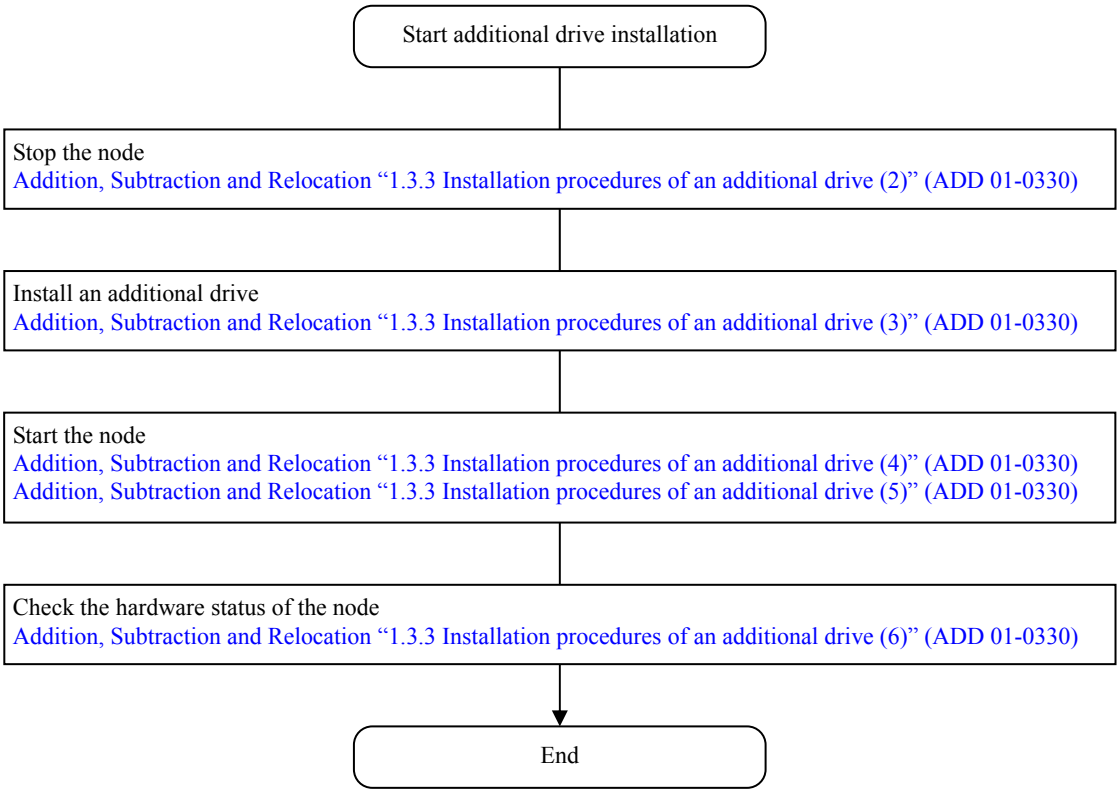

Figure 1.3.2-1 Installation Procedure of Additional Drive

Copyright © 2011, 2016, Hitachi, Ltd.

1.3.3 Installation procedure of additional drive

(1) Check the hardware status before installing an additional drive.
Check the following by referring to "B.3.1 Displaying the Hardware Status (hwstatus.)"

The status of [InternalHDD Information] of No. 0 to 5, 12, and 13 are all "ok."

If any of the status of No. 0 to 5, 12, and 13 is other than "ok," replace parts by referring to "Replacement 'Chapter 1 Replacing the Components of Hitachi Data Ingestor' (REP 01-0000.)"

NOTE: If recovery of the user LU is required, proceed to step (2) after completing the recovery.

(2) Stop the OS on the target node.
Before stopping the OS of the node, ask the system administrator if the service can be stopped or not. After that confirmation, execute the operation.
For details about how to stop the OS on a node, refer to "Maintenance Tool '2.28 Terminating the OS of This Side Node (nasshutdown)' (MNTT 02-1740.)"

(3) Install an additional drive on the node by referring to "Maintenance Manual Hitachi Compute Rack 220SM [System Unit]" or "QuantaGrid Series D51B-2U Technical Guide".

NOTE:
- For how to install a HDD of the HA8000 series, refer to the replacement procedures described in "Maintenance Manual Hitachi Compute Rack 220SM [System Unit]". In that case, skip the HDD removal procedures in it.
  For how to install a drive of D51B-2U, refer to "QuantaGrid Series D51B-2U Technical Guide 'Installing the SSD module'".
- For the installation location of HDD, refer to "Cautions and restrictions when disassembling and assembling" of the HDD replacement procedures described in "Maintenance Manual Hitachi Compute Rack 220SM [System Unit.]"

(4) Press the Power switch after completion of the drive installation on the node.

(5) Confirm that the OS on the node started up completely.
Check that the login prompt window is displayed by referring to "Set Up '1.3 Startup Confirmation of the OS by using KVM' (SETUP 01-0010.)"

NOTE: Wait approximately 10 minutes until the OS is completely started.

(6) Check the hardware status of the node.
Check the following to confirm the hardware status by referring to "B.3.1 Displaying the Hardware Status (hwstatus.)"

The status of No. 0 to 13 of [InternalHDD Information] are all "ok."

If the status of No. 0 to 13 are not all "ok," replace parts by referring to "Replacement 'Chapter 1 Replacing the Components of Hitachi Data Ingestor' (REP 01-0000.)"

Copyright © 2012, 2016, Hitachi, Ltd.

1.4 Additional Fibre Channel Card Installation

NOTE: The procedures described in this section are applicable to CR220SM.

With the procedures, you can install an additional Fibre Channel card and confirm that the installed Fibre Channel card is recognized by the OS properly.

1.4.1 Preconditions for additional Fibre Channel card installation

- Perform an additional Fibre Channel card installation with the service stopped.
- The required OS version of the node is 4.0.0-XX or later. For how to check the OS version, refer to "Maintenance Tool '2.34 Displaying the Version of the OS (versionlist)' (MNTT 02-2060.)"

1.4.2 Procedure overview of additional Fibre Channel card installation

The following shows the overview of the additional Fibre Channel card installation procedure.

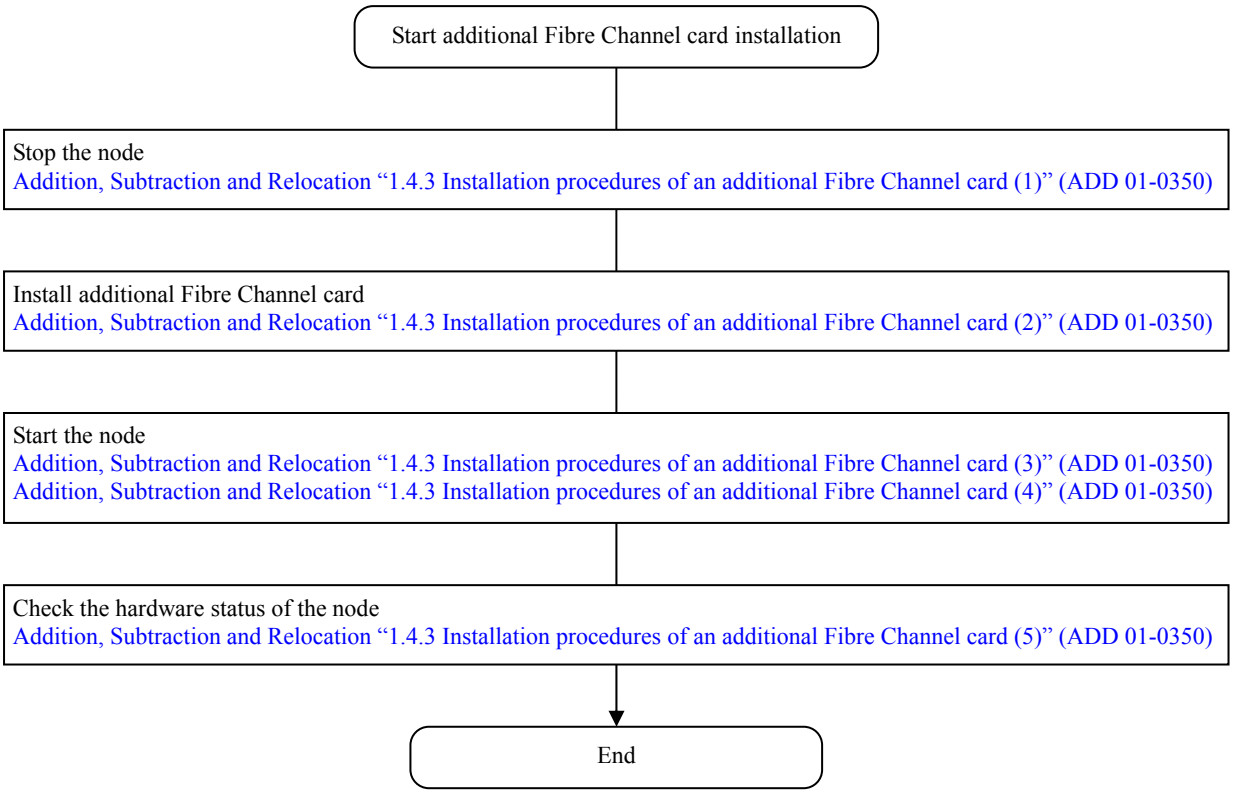

Figure 1.4.2-1 Installation Procedure of Additional Fibre Channel Card

Copyright © 2012, 2014, Hitachi, Ltd.

1.4.3 Installation procedure of additional Fibre Channel card

(1) Stop the OS on the target node.
Before stopping the OS of the node, ask the system administrator if the service can be stopped or not. After confirming that, execute the operation.
For details about how to stop the OS on a node, refer to "Maintenance Tool '2.28 Terminating the OS of This Side Node (nasshutdown)' (MNTT 02-1740.)"

(2) Install an additional Fibre Channel card by referring to "Maintenance Manual Hitachi Compute Rack 220SM [System Unit.]"

NOTE:
- For how to install an additional Fibre Channel card, refer to the Fibre Channel card replacement procedures described in "Maintenance Manual Hitachi Compute Rack 220SM [System Unit.]" However, ignore the Fibre Channel card removal procedures in the replacement procedures.
- Fibre Channel card to be installed in Slot 2. For the location of Slot 2, refer to "A.2.2.2 Port arrangement and port names."
- When removing cables (LAN cable, the power cable, and KVM cable,) confirm that each cable is labeled with the information required for reconnection before removing it.

(3) After completing an additional Fibre Channel card installation, reconnect the cables to the location as it were if the additional installation was done by removing all the cables, and then press the Power switch.
To reconnect the cables, use the information on each cable confirmed in step (2.)

(4) The node will be started in step (3.) Confirm that the OS on the node started up completely.
Check that the login prompt window is displayed by referring to "Set Up '1.3 Startup Confirmation of the OS by using KVM' (SETUP 01-0010.)"

NOTE: Wait approximately 10 minutes until the OS is completely started.

(5) Check the HBA firmware version.
Check the HBA firmware version by referring to "Maintenance Tool '2.24 Checking the HBA Firmware Version (fchbafwlist)' (MNTT 02-1600,)" and write down it as a record of the work.

Copyright © 2012, Hitachi, Ltd.

1.5 Additional Disk Array Installation (Single Node Configuration)

NOTE: The procedures described in this section are applicable to CR220SM, and the subject disk array subsystem to be additionally installed is HUS100 series.

With the procedures, you can install an additional disk array subsystem and confirm that the installed disk array subsystem is connected properly.

1.5.1 Preconditions for additional disk array subsystem installation

- The required OS version of the node is 4.0.0-XX or later. For how to check the OS version, refer to "Maintenance Tool '2.34 Displaying the Version of the OS (versionlist)' (MNTT 02-2060.)"
- It is required that additional Fibre Channel card has been already installed on the node where to connect the disk array subsystem.
- Perform an additional disk array subsystem installation with the service stopped.
- Before additionally installing the disk array subsystem, the setting on the disk array must be completed in accordance with the configuration instruction. If the setting on the disk array subsystem is not completed, request the system administrator.

1.5.2 Procedure overview of additional disk array subsystem installation

The following shows the overview of the additional disk array subsystem installation procedure.

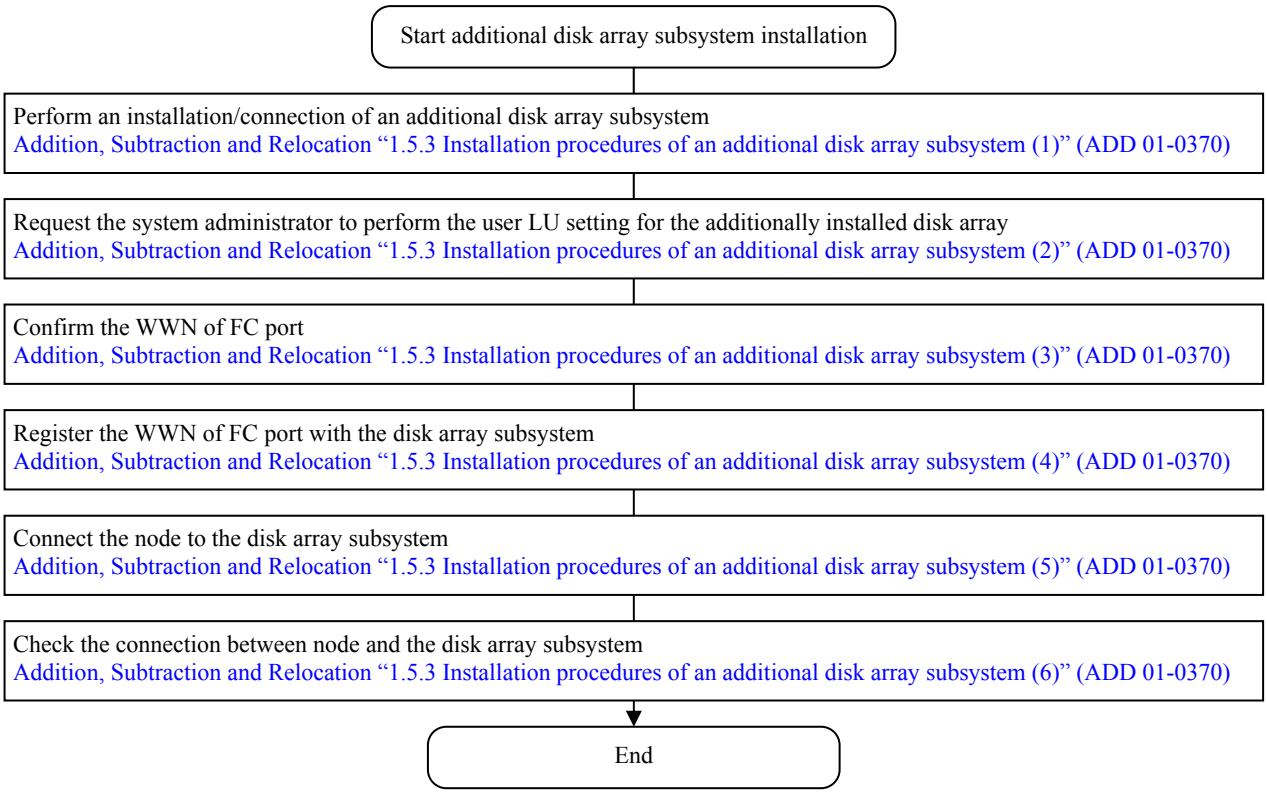

Figure 1.5.2-1 Installation Procedure of Additional Disk Array Subsystem

Copyright © 2012, Hitachi, Ltd.

1.5.3 Installation procedure of additional disk array subsystem

(1) Mount a carried-in additional disk array subsystem on the rack and turn on the power.
Request the system administrator to confirm the normality of the additional disk array subsystem.
At this point, do not connect the disk array subsystem and the node with a FC cable.

(2) Confirm with the system administrator that a user LU has been already created on the additionally installed disk array subsystem. If it has not been created, request to create a RAID group and a user LU complying with the plan.

NOTE: A user LU is required for the connection confirmation with the disk array subsystem. When there is no user LU complying with the plan, request to create a user LU for the confirmation.

(3) Confirm WWNs for FC ports. Record the WWNs available for both the FC ports of the additional disk array subsystem and the node to be connected.

NOTE:
- A WWN for "PORT 0" (a 16-digit hexadecimal number: 5000xxxx xxxxxxxx) is labeled on the side of the Fibre Channel cable inlet.
- WWN for "PORT 1" can be calculated by adding 2 to the WWN for "PORT 0."
(e.g., when WWN for "PORT 0" is "5000xxxx xxxx0A29," WWN for "PORT 1" is "5000xxxx xxxx0A2B.")
- A port with smaller port name is "PORT 0."
(e.g., when the port names are fc0002 and fc0003, fc0002 is "PORT 0.")

Table 1.5.3-1 Example of Writing Worksheet for Memo of WWN

	fc0002	fc0003
WWN	50000870 0053C160	50000870 0053C162

(4) Refer to "LUN Manager User's Guide" and register the WWNs recorded in Table 1.5.3-1 Example of Writing Worksheet for Memo of WWN to the additional disk array subsystem.

(5) Connect the disk array subsystem and the node with a FC cable in accordance with the configuration instruction.
After connecting the FC cable, confirm that the FC port in the additionally installed disk array subsystem is linked up. For how to confirm the link-up of the additionally installed disk array subsystem, refer to the maintenance manual of the relevant disk array or the user's guide.

(6) Execute the fpstatus command and check the followings. For the fpstatus command, refer to "Maintenance Tool '2.5 Displaying the FC Status (fpstatus)' (MNTT 02-0280.)"
- 2 FC paths for the additional disk array subsystem are displayed.
- Status of the 2 FC paths are both "Online."

In the case the displayed FC path for the additional disk array subsystem is other than 2, or the status of the FC path is other than "Online," identify the failure (or the configuration error) and recover it by referring to "C.2.2 Determination Procedure when a Failure Occurred."

Copyright © 2012, Hitachi, Ltd.

1.6 Additional GbE-4Port / 10GbE-2Port Card Installation

NOTE: When additionally installing 10GbE-2Port card, read “GbE-4Port card” in this section as “10GbE-2Port card.”

With the procedures, you can install an additional GbE-4Port card and confirm that that the installed GbE-4Port card is recognized by the OS properly.

1.6.1 Additional GbE-4Port / 10GbE-2Port Card Installation (Single Node Configuration)

NOTE:• The procedures described in this section are applicable to CR210HM and D51B-2U.

1.6.1.1 Preconditions for additional GbE-4Port/10GbE-2Port card installation

- It is required that the OS can start as the single node configuration.
- Perform an additional GbE-4Port card installation with the service stopped.

1.6.1.2 Procedure overview of additional GbE-4Port/10GbE-2Port card installation

The following shows the overview of the additional GbE-4Port card installation procedure.

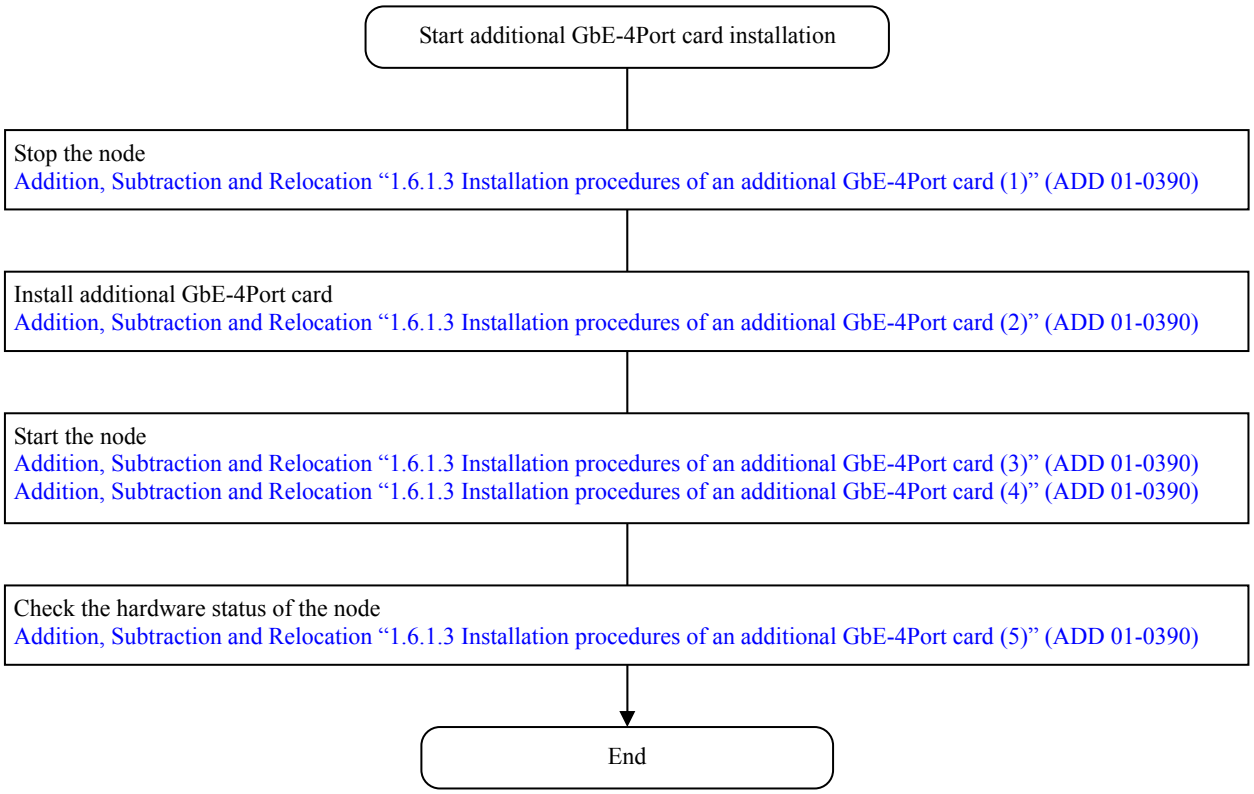

Figure 1.6.1.2-1 Installation Procedure of Additional GbE-4Port card

Copyright © 2012, 2016, Hitachi, Ltd.

1.6.1.3 Installation procedure of additional GbE-4Port/10GbE-2Port card

(1) Stop the OS on the target node.
Before stopping the OS of the node, ask the system administrator if the service can be stopped or not. After that confirmation, execute the operation.
For details about how to stop the OS on a node, refer to "Maintenance Tool '2.28 Terminating the OS of This Side Node (nasshutdown)' (MNTT 02-1740.)"

(2) Install an additional GbE-4Port card by referring to "Maintenance Manual Hitachi Compute Rack 210HM [System Unit.]" or "QuantaGrid Series D51B-2U Technical Guide".

NOTE:
- For how to install a GbE-4Port card in the HA8000 series, see the GbE-4Port card replacement procedures described in "Maintenance Manual Hitachi Compute Rack 210HM [System Unit]". In that case, skip the GbE-4Port card removal procedures in the replacement procedures.
  For how to install a GbE-4Port card of D51B-2U, refer to "QuantaGrid Series D51B-2U Technical Guide 'To install the PCIe riser card'".
- In the case of CR2x0, install the GbE-4Port card in Slot1. For the location of Slot1, refer to "A.2.2.2 Port arrangement and port names."
- When removing cables (LAN cable, the power cable, and KVM cable,) confirm that each cable is labeled with the information required for reconnection before removing it.

(3) After completion of an additional GbE-4Port card installation, reconnect the cables to the location as it were if the additional installation was done by removing all the cables, and then press the Power switch.
To reconnect the cables, use the information on each cable confirmed in step (2).

(4) Confirm that the OS on the node started up completely.
Check that the login prompt window is displayed by referring to "Set Up '1.3 Startup Confirmation of the OS by using KVM' (SETUP 01-0010.)"

NOTE: Wait approximately 10 minutes until the OS is completely started.

(5) Check the hardware status of the node.
Check the following to confirm the hardware status by referring to "B.3.1 Displaying the Hardware Status (hwstatus.)" (In this procedure reading "GbE-4Port card" as "10GbE-2Port card" is not required.)

[For CR2x0]
- When additionally installing a GbE-4Port card
  Port names "eth2", "eth3", "eth4", and "eth5" are displayed in [Network Interface.]
- When additionally installing a 10GbE-2Port card
  Port names "xgbe0" and "xgbe1" are displayed in [Network Interface.]

[For D51B-2U]
- When additionally installing a GbE-4Port card
  Port names "eth8", "eth9", "eth10", and "eth11" or "eth12", "eth13", "eth14", and "eth15" are displayed in [Network Interface.]
- When additionally installing a 10GbE-2Port card
  Port names "xgbe4" and "xgbe5" or "xgbe8" and "xgbe9" are displayed in [Network Interface.]

If the port names are not displayed, additional parts by referring to "Replacement 'Chapter 1 Replacing the Components of Hitachi Data Ingestor' (REP 01-0000.)"

Copyright © 2012, 2016, Hitachi, Ltd.

1.6.2 Additional GbE-4Port / 10GbE-2Port Card Installation (Cluster Configuration)

NOTE: • The procedures described in this section are applicable to D51B-2U.

1.6.2.1 Preconditions for additional GbE-4Port/10GbE-2Port card installation

- To perform an additional GbE-4Port card installation, failover/failback operations are required.

1.6.2.2 Procedure overview of additional GbE-4Port/10GbE-2Port card installation

The following shows the overview of the additional GbE-4Port card installation procedure.

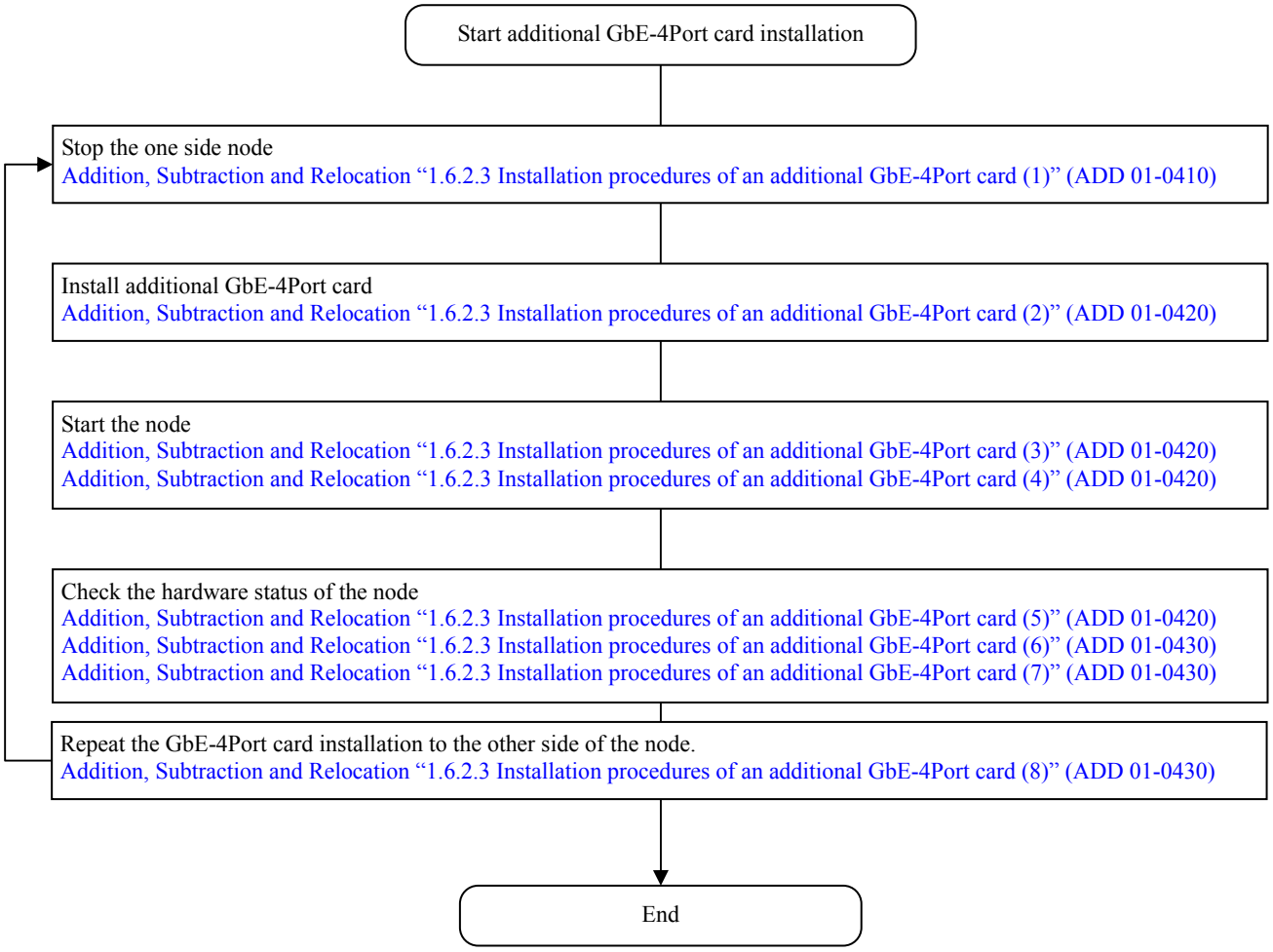

Figure 1.6.2.2-1 Installation Procedure of Additional GbE-4Port card

Copyright © 2015, 2016, Hitachi, Ltd.

1.6.2.3 Installation procedure of additional GbE-4Port/10GbE-2Port card

(1) Stop the OS on the target node.
Before stopping the OS of the node, ask the system administrator to perform the failover on one side of the resource group and stop the node.
Request the system administrator to perform failover the resource group of the node to be installed additional GbE-4Port card to the other node and to set the "Node Status" of the node to be installed additional GbE-4Port card to "INACTIVE" because the OS is required to be stopped when installing. After completing the operation by the system administrator, verify that the status is shown as in Table 1.6.2.3-1.
However, if the system administrator is absent, after contacting the system administrator and acquiring the permission for the above-mentioned operation, the maintenance personnel executes the operation. For the procedure of executing the operation, refer to "Maintenance Tool '3.1 Failover and Node Termination to Execute the OS stop or the OS reboot' (MNTT 03-0000)".

Table 1.6.2.3-1 Confirmation of Failover and Stopping Node

Type of operation	Operation by the system administrator	Confirming operation by the maintenance personnel (*1)
Resource group failover	Transfers the resource group that is operating in the node to be maintained to the normal node. For the details, refer to "General 'Reference Place in User's Guide for Operating Procedures Table 4 'Changing the execution node of a resource group'' (GENE 00-0040)".	Confirm that the "Running node" of the both resource groups are normal node.
Stopping node	Stops the service of the node to be maintained. For the details, refer to "General 'Reference Place in User's Guide for Operating Procedures Table 4 'Stopping and starting a node'' (GENE 00-0040)".	Check if the "Node Status" of the target node to be maintained shows "INACTIVE".

*1: Refer to "Maintenance Tool '2.2 Displaying the Cluster Status (clstatus)' (MNTT 02-0040)".

Copyright © 2015, 2016, Hitachi, Ltd.

(2) Install an additional GbE-4Port card by referring to “QuantaGrid Series D51B-2U Technical Guide”.

NOTE:
- For how to install a GbE-4Port card of D51B-2U, see “QuantaGrid Series D51B-2U Technical Guide ‘To install the PCIe riser card’”.
- When removing cables (LAN cable, the power cable, and KVM cable,) confirm that each cable is labeled with the information required for reconnection before removing it.

(3) After completion of an additional GbE-4Port card installation, reconnect the cables to the location as it were if the additional installation was done by removing all the cables, and then press the Power switch.
To reconnect the cables, use the information on each cable confirmed in step (2).

(4) Confirm that the OS on the node started up completely.
Check that the login prompt window is displayed by referring to “Set Up ‘1.3 Startup Confirmation of the OS by using KVM’ (SETUP 01-0010.)”

NOTE: Wait approximately 10 minutes until the OS is completely started.

(5) Check the hardware status of the node.
Check the following to confirm the hardware status by referring to “B.3.1 Displaying the Hardware Status (hwstatus.)” (In this procedure reading “GbE-4Port card” as “10GbE-2Port card” is not required.)

- When additionally installing a GbE-4Port cardPort names “eth8”, “eth9”, “eth10”, and “eth11” or “eth12”, “eth13”, “eth14”, and “eth15” are displayed in [Network Interface.]
- When additionally installing a 10GbE-2Port card Port names “xgbe4” and “xgbe5” or “xgbe8” and “xgbe9” are displayed in [Network Interface.]

If the port names are not displayed, additional parts by referring to “Replacement ‘Chapter 1 Replacing the Components of Hitachi Data Ingestor’ (REP 01-0000.)”

Copyright © 2015, 2016, Hitachi, Ltd.

(6) Request the system administrator to set the “Node Status” of the node where the parts are installed additional GbE-4Port card to “UP” and to perform failback the resource group, which has been performed failover, to the node where the parts are installed additional GbE-4Port.
For the reference place in User’s Guide describing the details about starting a node, refer to “General ‘Reference Place in User's Guide for Operating Procedures Table 4 ‘Stopping and starting a node’’ (GENE 00-0040)”, and for the reference place in User’s Guide describing the details about failover/failback of a resource group, refer to “General ‘Reference Place in User's Guide for Operating Procedures Table 4 ‘Changing the execution node of a resource group’’ (GENE 00-0040)”.
However, if the system administrator is absent, after contacting the system administrator and acquiring the permission for the above-mentioned operation, the maintenance personnel executes the operation. For the procedure of executing the operation, refer to “Maintenance Tool ‘3.2 Failback and Start of Node After Starting the OS’ (MNTT 03-0030)”.

(7) For checking the failback, check that the “Node Status” of the node to which the additional GbE-4Port card has been installed is “UP” and the “Resource Group Status” is “Online/No error” in the display referring to “Maintenance Tool ‘2.2 Displaying the Cluster Status (clstatus)’ (MNTT 02-0040)”. If they are not displayed, perform from step (6) again.

NOTE: If “No error” is not contained in the indication for “Resource Group Status”, which is the result of clstatus command when the resource group is in operation, report the content of “Resource Group Status” to the system administrator and eliminate the cause of the failure.
However, if the system administrator is absent, after contacting the system administrator and acquiring the permission for the above-mentioned operation, the maintenance personnel executes the operation. For the procedure of executing the operation, refer to “Maintenance Tool ‘3.3 The Operation Accompanying Forced Stop of the Resource group’ (MNTT 03-0060)”.

(8) If GbE-4Port card is added to only one node, perform the procedure 1.6.2.3 from the beginning to the other side of the node in like manner. When adding GbE-4Port card to the both nodes is complete, the operation is finished.

Copyright © 2016, Hitachi, Ltd.

1.7 Additional Memory Installation

NOTE: The procedures described in this section are applicable to D51B-2U.

With the procedures, you can install an additional memory and confirm that the installed memory is recognized by the OS properly.

1.7.1 Additional Memory Installation (Cluster Configuration)

1.7.1.1 Preconditions for additional memory installation

- Though the additional installation of memory can be performed in the status while the system is in operation, execute the resource group failover manually and perform additional memory installation for each node separately.
- Two 16GB memory cards are needed by one node.
- Same size memory should be installed for both nodes.
- About the installation step of memory, refer to ”Quanta Grid Series D51B-2U Technical Guide ‘Installing Hardware 2.16 Memory Modules’”.

Copyright © 2016, Hitachi, Ltd.

1.7.1.2 Procedure overview of additional memory

The following shows the overview of the additional memory installation procedure.

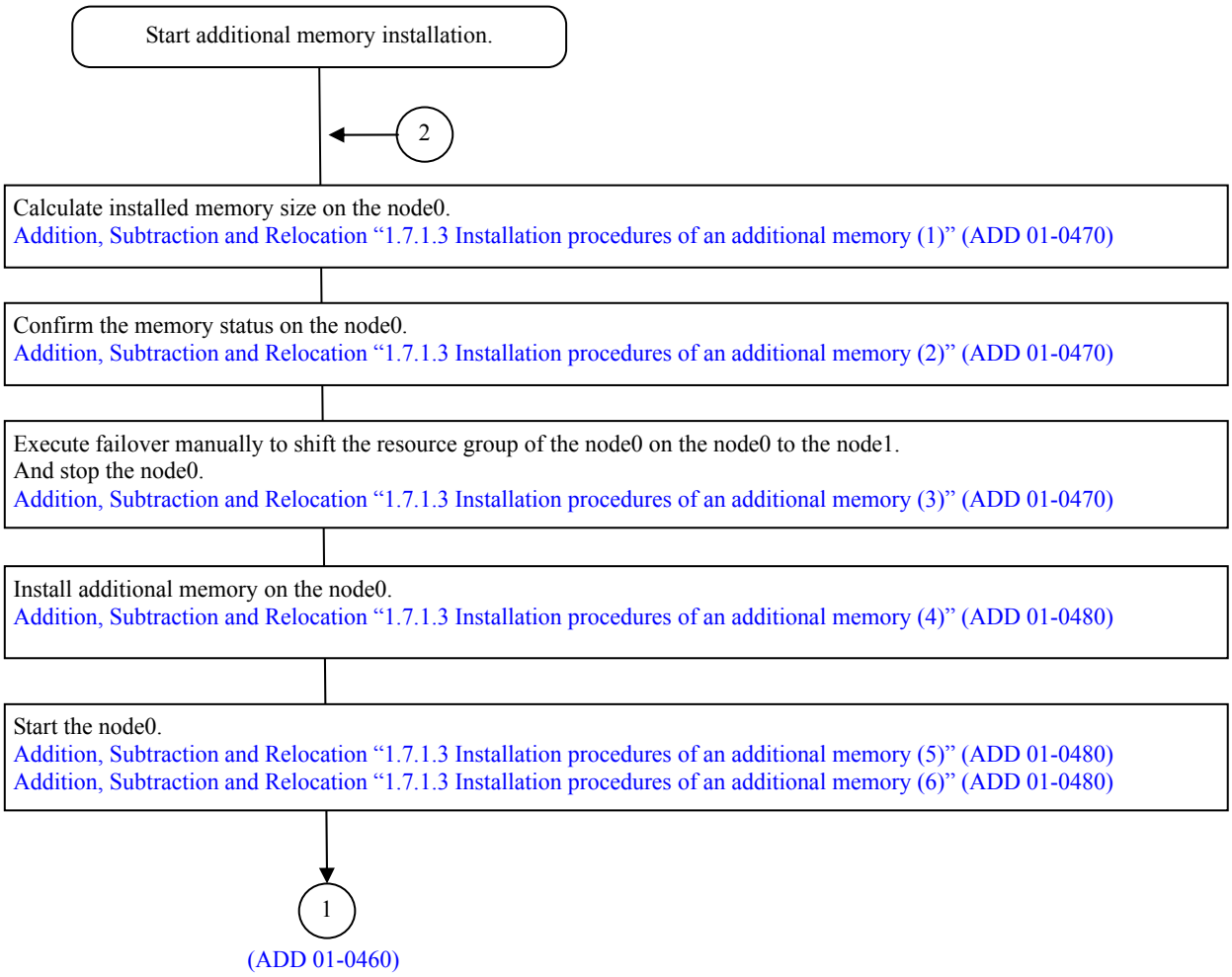

Figure 1.7.1.2-1 Procedure overview of additional memory installation (1/2)

Copyright © 2016, Hitachi, Ltd.

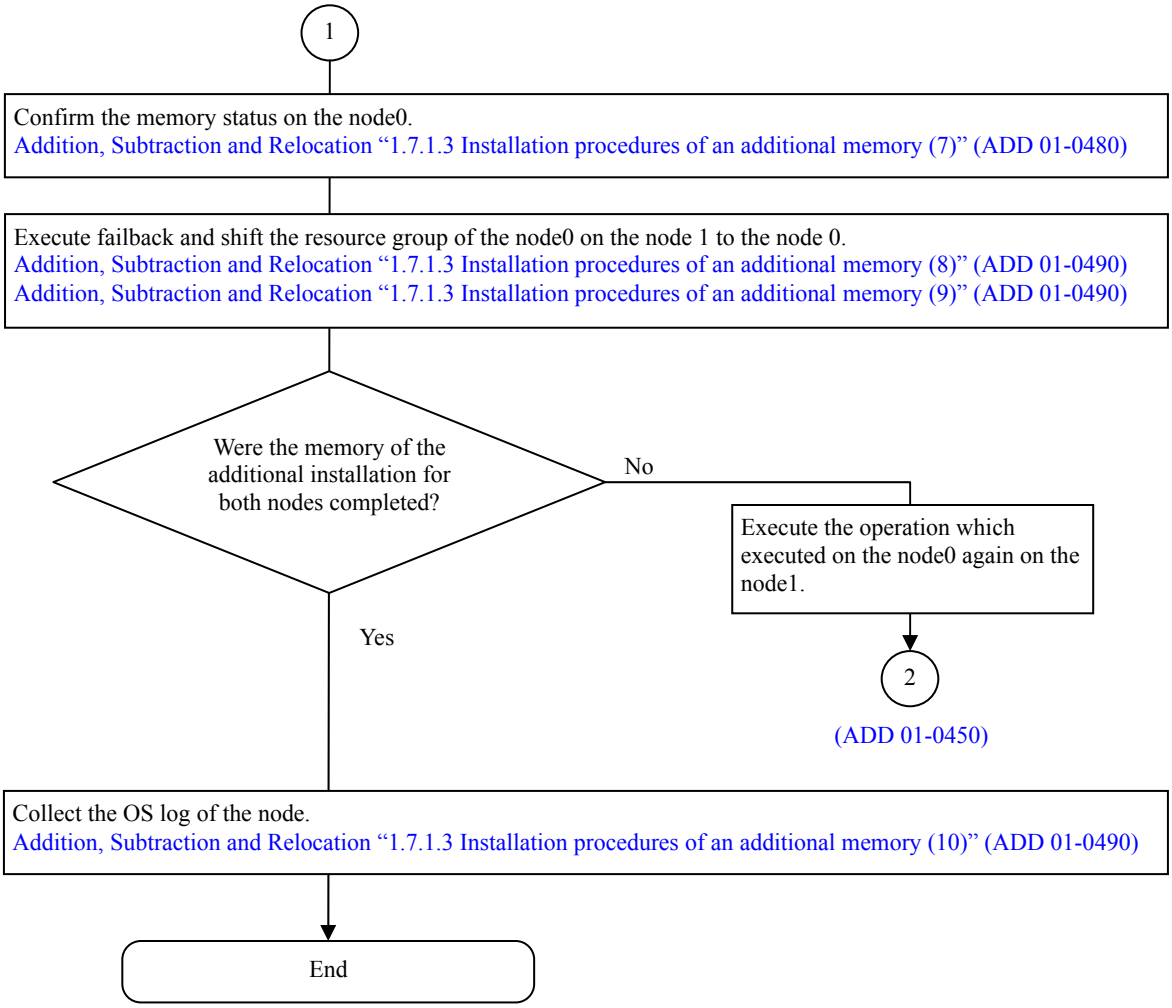

Figure 1.7.1.2-1 Procedure overview of additional memory installation (2/2)

Copyright © 2016, Hitachi, Ltd.

1.7.1.3 Installation procedure of additional memory

NOTE: Following procedure is an example carried out in order of adding memory installation to node0, node1.

(1) Calculate the total memory size before and after additional installation.
For memory size before and after additional installation is referring to Table 1.7.1.3-1.
Memory size after additional installation is calculated from the sum of the memory size before additional installation and the additional memory size.

Table 1.7.1.3-1 Memory Size of After/Before additional installation

Model	Memory size before additional installation	Additional memory size	Memory size after additional installation
D51B-2U (/per node)	32GB (16GBx2)	32GB (16GBx2)	64GB (16GBx4)
	32GB (16GBx2)	64GB (16GBx4)	96GB (16GBx6)

(2) Check the hardware status of the node0 before the additional memory installation.
Check the following to confirm the hardware status by referring to "B.3.1 Displaying the Hardware Status (hwstatus.)"

- With [Memory Information] filed, the installed memory size is correct and the status of installed memory displays "installed".
- The memory size that displayed in ( ) of the [MemoryTotal Information] field and the calculated memory size before the additional memory installation are the same.

If the some failure has been in the node, determine the failure parts and replace it. Refer to "Replacement 'Chapter 1 Replacing the Components of Hitachi Data Ingestor' (REP 01-0000)", and replace the hardware in which a failure was detected.

(3) Perform failover on the node0 manually and terminates the service of the node0.
Request the system administrator to migrate the resource group of the node0 to node1 and to set the "Node Status" of the node0 to be maintained to "INACTIVE".
After completed the operations of system administrator, check that the status becomes as shown in the Table 1.7.1.3-2. Note that if the system administrator is absent, maintenance personnel should make contact with the system administrator and execute this operation with his/her permission.
For the procedure of this operation, refer to "Maintenance Tool '3.1 Failover and Node termination to execute the OS stop or the OS reboot' (MNTT 03-0000)".
For details about how to stop the OS on a node, refer to "Maintenance Tool '2.28 Terminating the OS of This Side Node (nasshutdown)' (MNTT 02-1740)".

Table 1.7.1.3-2 Confirmation of Failover and Stopping Node

Type of operation	Operation by system administrator	Confirmation operation by maintenance personnel (*1)
Failover of resource group	Migrates the resource group running in the target node to the normal node. For the details, refer to "General 'Reference Place in User's Guide for Operating Procedures Table 4 'Changing the execution node of a resource group'' (GENE 00-0040)".	Confirm the "Running node" of each of the resource groups is a normal node.
Node termination	Terminates the service of the target node. For the details, refer to "General 'Reference Place in User's Guide for Operating Procedures Table 4 'Stopping and starting a node'' (GENE 00-0040)".	Check if the "Node Status" of the target node to be maintained shows "INACTIVE".

*1: Refer to "Maintenance Tool '2.2 Displaying the Cluster Status (clstatus) Table 2.2.2 Cluster status to be used for the confirmation when the maintenance is in progress'(MNTT 02-0051)".

Copyright © 2016, 2017, Hitachi, Ltd.

(4) Install an additional the memory for node0 by referring to ”Quanta Grid Series D51B-2U Technical Guide”.

NOTE:
- For how to install an additional memory, refer to the memory installation procedures described in “Quanta Grid Series D51B-2U Technical Guide”.
- When removing cables (LAN cable, Fibre Channel cable, the power cable, and KVM cable), confirm that each cable is labeled with the information required for reconnection before removing it.

(5) After completing an additional memory installation for node0, reconnect the cables to the location as it were if the additional installation was done by removing all the cables, and then press the Power switch.
To reconnect the cables, use the label information on each cable confirmed in step (4.)

(6) Confirm that the OS on the node0 started up completely.
Check that the login prompt window is displayed by referring to “Set Up ‘1.3 Startup Confirmation of the OS by using KVM’ (SETUP 01-0010.)”

NOTE: Wait approximately 10 minutes until the OS is completely started.

(7) Check the hardware status of the node0.
Check following items to confirm the hardware status by referring to “B.3.1 Displaying the Hardware Status (hwstatus.)”.
- Check the installed memory size for both memory of current and added are correct and the status of installed memory displays “installed” at the [Memory Information] field.
- The memory size that displayed in ( ) of the [MemoryTotal Information] field and the calculated memory size after the additional memory installation are the same.

If the some failure has been in the node, determine the failure parts and replace it. Refer to “Replacement ‘Chapter 1 Replacing the Components of Hitachi Data Ingestor’ (REP 01-0000)”, and replace the hardware in which a failure was detected.

Copyright © 2016, Hitachi, Ltd.

(8) Request the system administrator to set the “Node Status” of the node where the parts are replaced to “UP” and to perform failback the resource group, which has been performed failover, to the node where the memory is additionally installed.

For the reference place in User’s Guide describing the details about starting a node, refer to “General ‘Reference Place in User's Guide for Operating Procedures Table 4 ‘Stopping and starting a node’’ (GENE 00-0040)”, and for the reference place in User’s Guide describing the details about failover/failback of a resource group, refer to “General ‘Reference Place in User's Guide for Operating Procedures Table 4 ‘Changing the execution node of a resource group’’ (GENE 00-0040)”.

However, if the system administrator is absent, after contacting the system administrator and acquiring the permission for the above-mentioned operation, the maintenance personnel execute the operation. For the procedure of executing the operation, refer to “Maintenance Tool ‘3.2 Failback and Start of Node After Starting the OS’ (MNTT 03-0030)”.

(9) For checking the failback, check that the “Node Status” of the node after additionally installation is “UP” and the “Resource Group Status” is “Online/No error” in the display referring to “Maintenance Tool ‘2.2 Displaying the Cluster Status (clstatus)’ (MNTT 02-0040)”. If they are not displayed, perform from step (f) again.

NOTE: If “No error” is not contained in the indication for “Resource Group Status”, which is the result of clstatus command when the resource group is in operation, report the content of “Resource Group Status” to the system administrator and eliminate the cause of the failure.
However, if the system administrator is absent, after contacting the system administrator and acquiring the permission for the above-mentioned operation, the maintenance personnel execute the operation. For the procedure of executing the operation, refer to “Maintenance Tool ‘3.3 The Operation Accompanying Forced Stop of the Resource group’ (MNTT 03-0060)”.

(10) Perform the additional memory installation for node1.Substitute “node0” with “node1”, “node1” with “node0” from procedure (1) to (9), and perform the procedures. After that, collect OS logs of the both nodes. For collecting the OS log, refer to “Maintenance Tool ‘2.19 Collecting Logs (oslogget) ’ (MNTT 02-1300)”and acquire logs.

Copyright © 2016, Hitachi, Ltd.

1.7.2 Additional Memory Installation (Single Node Configuration)

1.7.2.1 Preconditions for additional memory installation

- The additional installation of memory could not be performed in the status while the system is in operation.
- Two 16GB memory cards are needed.
- About the installation step of memory, refer to ”Quanta Grid Series D51B-2U Technical Guide ‘Installing Hardware 2.16 Memory Modules’”.

1.7.2.2 Procedure overview of additional memory

The following shows the overview of the additional memory installation procedure.

Figure 1.7.2.2-1 Procedure overview of additional memory installation

Copyright © 2016, Hitachi, Ltd.

1.7.2.3 Installation procedure of additional memory

(1) Calculate the total memory size before and after additional installation.
For memory size before and after additional installation is refer to Table 1.7.2.3-1.
Memory size after additional installation is calculated from the sum of the memory size before additional installation and the additional memory size.

Table 1.7.2.3-1 Memory Size of After/Before additional installation

Model	Memory size before additional installation	Additional memory size	Memory size after additional installation
D51B-2U (/per node)	32GB (16GBx2)	32GB (16GBx2)	64GB (16GBx4)

(2) Check the hardware status of the node before the additional memory installation.
Check the following to confirm the hardware status by referring to "B.3.1 Displaying the Hardware Status (hwstatus.)"
- With [Memory Information] filed, the installed memory size is correct and the status of installed memory displays "installed".
- The memory size that displayed in ( ) of the [MemoryTotal Information] field and the calculated memory size before the additional memory installation are the same.

If the some failure has been in the node, determine the failure parts and replace it. Refer to "Replacement 'Chapter 1 Replacing the Components of Hitachi Data Ingestor' (REP 01-0000)", and replace the hardware in which a failure was detected.

(3) Stop the OS on the target node.

Before stopping the OS of the node, ask the system administrator if the service can be stopped or not. After that confirmation, execute the operation.
For details about how to stop the OS on a node, refer to "Maintenance Tool '2.28 Terminating the OS of This Side Node (nasshutdown)' (MNTT 02-1740.)"

(4) Install an additional the memory for node by referring to "Quanta Grid Series D51B-2U Technical Guide".

NOTE:
- For how to install an additional memory, refer to the memory installation procedures described in "Quanta Grid Series D51B-2U Technical Guide".
- When removing cables (LAN cable, Fibre Channel cable, the power cable, and KVM cable), confirm that each cable is labeled with the information required for reconnection before removing it.

(5) After completing an additional memory installation for node, reconnect the cables to the location as it were if the additional installation was done by removing all the cables, and then press the Power switch.
To reconnect the cables, use the label information on each cable confirmed in step (4.)

(6) Confirm that the OS on the node started up completely.
Check that the login prompt window is displayed by referring to "Set Up '1.3 Startup Confirmation of the OS by using KVM' (SETUP 01-0010.)"

NOTE: Wait approximately 10 minutes until the OS is completely started.

Copyright © 2016, Hitachi, Ltd.

(7) Check the hardware status of the node.
Check following items to confirm the hardware status by referring to "B.3.1 Displaying the Hardware Status (hwstatus.)".

- Check the installed memory size for both memory of current and added are correct and the status of installed memory displays "installed" at the [Memory Information] field.
- The memory size that displayed in ( ) of the [MemoryTotal Information] field and the calculated memory size after the additional memory installation are the same.

If the some failure has been in the node, determine the failure parts and replace it. Refer to "Replacement 'Chapter 1 Replacing the Components of Hitachi Data Ingestor' (REP 01-0000)", and replace the hardware in which a failure was detected.

(8) Collect the OS log.
For collecting the OS log, refer to "Maintenance Tool '2.19 Collecting Logs (oslogget) ' (MNTT 02-1300)"and acquire logs.

Copyright © 2016, Hitachi, Ltd.

Chapter 2 Subtracting Optional Components

Table 2-1 shows the list of optional components that can be reduced.

Table 2-1 List of Optional Components for Subtraction

#	Subtracted part	Possibility of subtraction					Remarks
		HA8000 RS220KK	Dell™ PowerEdge™ R710	CR210HM	CR220SM	D51B-2U	
1	Memory	Impossible	Impossible	Impossible	Impossible	Impossible	Un-supported in this version
2	Fibre Channel card						
3	GbE-4Port card						
4	10GbE-2Port card						
5	Disk array						
6	HCP node						

Copyright © 2011, 2016, Hitachi, Ltd.

This page is for editorial purpose only.

Copyright © 2011, Hitachi, Ltd.

Chapter 3 Appendix A Replacing two nodes of the cluster configuration with the new nodes

The following are the procedures to replace the previous nodes of Hitachi Data Ingestor or Hitachi NAS Platform F with the new nodes in a locale.

Replacing nodes means to exchange two previous nodes with the new nodes.

The new nodes take over a file system and a part of the system setting from the previous nodes after replacing hardware to restart operation.

Table 3-1 shows the definition of terms used in this chapter.

Table 3-1 Definition of Terms

#	Term	Meaning
1	the previous node	Node whose cluster has been constructed and operation is already running Node to be remove from the rack
2	the new node	Node whose cluster is to be constructed newly Node to be mounted on the rack

Table 3-2 shows an outline of the work procedure of node replacement.

Table 3-2 Outline of the Work Procedure (1/2)

#	Operator		Device to be worked	Work description	Reference
	System administrator	Maintenance personnel			
1				Plan node replacement	Addition, Subtraction and Relocation “3.1 Prerequisites of the Replacement Work” (ADD 03-0020)
2	—	☑		Stop observation by HiTrack.	None
3	—	☑	the previous node	Install the updated OS.	Addition, Subtraction and Relocation “3.2 Preparing replacement [the previous node]” (ADD 03-0020)
4	—	☑	the previous node	Collect setting information (FC path, LU information of the disk array device, network interface information, routing information, BMC information, system time).	
5	☑	—	the previous node	Delete network interfaces.	
6	☑	—	the previous node	Backup system setting information.	
7	—	☑	the previous node	Stop the power supply.	
8	☑	☑	the previous node	Remove cables.	
9	☑	☑	the previous node	Remove the node.	
10	☑	☑	the new node	Install the node.	Addition, Subtraction and Relocation “3.3 Preparing replacement [the new node]” (ADD 03-0070)
11	☑	☑	the new node	Connect cables.	
12	—	☑	the new node	Turn on power.	
13	—	☑	the new node	Check setting information of the new node. (BIOS version, BMC F/W version, WWN, OS version, BMC information)	
14	—	☑	the new node	Set time for the new node.	

Copyright © 2014, 2015, Hitachi, Ltd.

Table 3-2 Outline of the Work Procedure (2/2)

#	Operator		Device to be worked	Work description	Reference
	System administrator	Maintenance personnel			
15	—	☑	Disk array device	Reconfigure FC-HBA information registered in the disk array device.	Addition, Subtraction and Relocation “3.4 Reconfiguring disk array devices and the FC-SW” (ADD 03-0100)
16	☑	—	FC-SW	When configured to connect to the FC-SW, reconfigure FC-HBA information registered in the FC-SW.	
17	—	☑	the new node	Check connection between the node and disk array device.	
18	☑	—	the new node	Reflect system setting information into the node.	Addition, Subtraction and Relocation “3.5 Reflecting system setting information of the previous node into the new node” (ADD 03-0130)
19	☑	—	the new node	Define the cluster.	
20	☑	—	the new node	Create the network interface.	
21	☑	☑	the new node	Start up the cluster and resource group to confirm the status.	
22	☑	—	the new node	Confirm I/O of user data.	
23	—	☑		Check the setting and connection of the HiTrack.	None

Copyright © 2014, Hitachi, Ltd.

3.1 Prerequisites of the Replacement Work

The following are the prerequisites for node replacement. A work plan must fulfill the following conditions.

- The system operation is stopped before starting this work. No access to user data is allowed until this work is completed.
- Nodes to be worked have the cluster configuration of the resource group operation. It is not supported to replace the cluster configuration of the Virtual Server operation.
- It is not supported to replace nodes that use the encryption function.
- The OS version supports both the new and previous node.
- The configuration of BMC connection to reset the other node consists of the BMC and management SW connection configuration and BMC direct connection configuration. However, this work does not change the connection configuration. If the configuration change is required, perform it after completing the node replacement.
- This work supports only the configuration that has both four ports of the GbE and two ports of the FC.
- The procedure is not supported to replace parts such as memory boards or fans between the new node and previous node.
- The BIOS setting for the new node is completed at the shipment.
- Network information of the maintenance port and management port of the new mode at the shipment is the same setting as the previous node.
- To reflect system setting information of the previous node into the new node, the new node has the same or later OS version of the previous node.
- To save system setting information, “Node status” of the previous node is “UP” and “Resource group status” is “Online/No error” or “Offline/No error”.
  Also, the resource group is not failed over.
- When the height of the new node exceeds the previous node, the new node cannot be installed in the same place.

3.2 Preparing replacement [the previous node]

3.2.1 Execute an update installation to the previous node

Use the installation media attached to the new node to install the updated OS to the previous node.

(1) Check the OS version of the previous node.
Refer to “Maintenance Tool ‘2.34 Displaying the Version of the OS (versionlist)’ (MNTT 02-2060)” to confirm the OS version of both nodes.

When that is the same OS version as the new node, go to Addition, Subtraction and Relocation “3.2.2 Acquiring setting information of the previous node” (ADD 03-0030).

When that is an older OS version than the new node, go to the procedure (2).
When that is a newer OS version than the new node, stop the work and contact the system administrator.

(2) Install the updated OS to both existing nodes.
Refer to “Set Up ‘Chapter 2.3 Overview of Update Installation’ (SETUP 02-0040)” to confirm settings after the update installation.

Copyright © 2014, 2016, Hitachi, Ltd.

3.2.2 Acquiring setting information of the previous node

Execute a command to both existing nodes to output setting information to a file.

Then, transfer the output file to the Maintenance PC.

3.2.2.1 Acquiring setting information of the node 0

(1) Execute “sudo fpstatus -v > fpstatus_0.txt” at the node 0.
Then, execute “cat fpstatus_0.txt” to confirm the port name and serial number of the disk array device, and that the FC path status is output.
For the fpstatus command, refer to “Maintenance Tool ‘2.5 Displaying the FC Status (fpstatus)’ (MNTT 02-0280)”.

When the FC path status is other than “Online”, refer to “Maintenance Tool ‘2.5 Displaying the FC Status (fpstatus)’ (MNTT 02-0280)” to take necessary measures.

(2) Execute “sudo fpstatus --lupath > fpstatus_lupath_0.txt” at the node 0.
Then, execute “cat fpstatus_lupath_0.txt” to confirm the line that displays “N0-TXXX” is output to “Target”.
For the fpstatus command, refer to “Maintenance Tool ‘2.5 Displaying the FC Status (fpstatus)’ (MNTT 02-0280)”.

(3) Execute “sudo iflist > iflist_0.txt” at the node 0.
Then, execute “cat iflist_0.txt” to confirm interface information of “ethX” and “mng0” is output.
For the iflist command, refer to “Maintenance Tool ‘2.4 Displaying the Network Status (iflist)’ (MNTT 02-0200)”.

(4) Execute “sudo routelist > routelist_0.txt” at the node 0.
Then, execute “cat routelist_0.txt” to confirm some routing information is output in the [IPv4] column. It is not a problem if no default routing information is output.
For the iflist command, refer to “Maintenance Tool ‘2.84 Displaying the List of Routing Information (routelist)’ (MNTT 02-4380)”.

(5) Execute “sudo pmctl > pmctl_0.txt” at the node 0.
Then, execute “cat > pmctl_0.txt” to confirm interface information of “pm0” is output.
For the pmctl command, refer to “Maintenance Tool ‘2.41 Configuring a Private Maintenance LAN Port (pmctl)’ (MNTT 02-2370)”.

(6) Execute “sudo bmcctl > bmcctl_0.txt” at the node 0.
Then, execute “cat bmcctl_0.txt” to confirm interface information of bmc0 of both nodes is output.
For the bmcctl command, refer to “Maintenance Tool ‘2.18 Setting BMC LAN Information (bmcctl)’ (MNTT 02-1210)”.

(7) Execute “sudo lumaplist -v > lumaplist_0.txt” at the node 0.
Then, execute “cat lumaplist_0.txt” to confirm LU information is output.
For the lumaplist command, refer to “Maintenance Tool ‘2.65 User LU Mapping Display (lumaplist)’ (MNTT 02-3470)”.

(8) Transfer files created in the procedures (1) to (7) to the Maintenance PC. Files are stored in “/home/service/”.
For transferring files, refer to “Maintenance Tool ‘1.3.5 Commands used for transferring files’ (MNTT 01-0230)”.

(9) Delete files created in the procedures (1) to (7) on the node.
For deleting files, refer to “Maintenance Tool ‘2.26 Deleting the Specified File (rmfile)’ (MNTT 01-1660)”.

Copyright © 2014, Hitachi, Ltd.

3.2.2.2 Acquiring setting information of the node 1

(1) Execute “sudo fpstatus -v > fpstatus_1.txt” at the node 1.
Then, execute “cat fpstatus_1.txt” to confirm the port name and serial number of the disk array device, and that the FC path status is output.
For the fpstatus command, refer to “Maintenance Tool ‘2.5 Displaying the FC Status (fpstatus)’ (MNTT 02-0280)”.

When the FC path status is other than “Online”, refer to “Maintenance Tool ‘2.5 Displaying the FC Status (fpstatus)’ (MNTT 02-0280)” to take necessary measures.

(2) Execute “sudo fpstatus --lupath > fpstatus_lupath_1.txt” at the node 1.
Then, execute “cat fpstatus_lupath_1.txt” to confirm the line that displays "N1-TXXX" is output in “Target”.
For the fpstatus command, refer to “Maintenance Tool ‘2.5 Displaying the FC Status (fpstatus)’ (MNTT 02-0280)”.

(3) Execute “sudo pmctl > pmctl_1.txt” at the node 1.
Then, execute “cat > pmctl_1.txt” to confirm interface information of “pm0” is output.
For the pmctl command, refer to “Maintenance Tool ‘2.41 Configuring a Private Maintenance LAN Port (pmctl)’ (MNTT 02-2370)”.

(4) Execute “sudo lumaplist -v > lumaplist_1.txt” at the node 1.
Then, execute “cat lumaplist_1.txt” to confirm LU information is output.
For the lumaplist command, refer to “Maintenance Tool ‘2.65 User LU Mapping Display (lumaplist)’ (MNTT 02-3470)”.

(5) Transfer files created in the procedures (1) to (4) to the Maintenance PC. Files are stored in “/home/service/”.
For transferring files, refer to “Maintenance Tool ‘1.3.5 Commands used for transferring files’ (MNTT 01-0230)”.

(6) Delete files created in the procedures (1) to (4) on the node.
For deleting files, refer to “Maintenance Tool ‘2.26 Deleting the Specified File (rmfile)’ (MNTT 01-1660)”.

(7) Execute “timeget -u” at the node 1 to set the displayed time of the previous node to the Maintenance PC.
For the timeget command, refer to “Maintenance Tool ‘2.42 Acquisition of Time/ Time Zone (timeget)’ (MNTT 02-2430)”.
For setting to the Maintenance PC, refer to “Set Up ‘9.2 Acquiring OS Time’ (SETUP 09-0040)”.

Copyright © 2014, Hitachi, Ltd.

3.2.3 Deleting network interfaces and saving system setting information

(1) Request the system administrator to delete network interfaces of all data ports (excluding the management port, heart beat port, maintenance port, and BMC port).
Inform that the ifdel command has an option to collectively delete network interfaces of all data ports.

(2) Request the system administrator to use the HFSM to manually backup system setting information and to download the settings to the Maintenance PC of the customer.

3.2.4 Stopping previous nodes

Stop both nodes.

(1) Execute “sudo clstatus” at the node 0 to confirm both resource group names.
For the clstatus command, refer to “Maintenance Tool ‘2.2 Displaying the Cluster Status (clstatus)’ (MNTT 02-0040)”.

(2) Execute “sudo rgstop <*resource group name*>” at the node 0 to stop the resource group. Stop both resource groups.
For the rgstop command, refer to “Maintenance Tool ‘2.53 Stopping Resource group (rgstop)’ (MNTT 02-2950)”.

(3) Execute “sudo clstop” at the node 0 to stop the cluster.
For the clstop command, refer to “Maintenance Tool ‘2.49 Stopping the Cluster (clstop)’ (MNTT 02-2720)”.

(4) Execute “sudo clstatus” at the node 0 to confirm the cluster status.
Confirm that “Cluster status” is “INACTIVE” and that “Node status” of both nodes is “INACTIVE”.
For the clstatus command, refer to “Maintenance Tool ‘2.2 Displaying the Cluster Status (clstatus)’ (MNTT 02-0040)”.

(5) Execute “sudo nasshutdown” at the node 0 to stop the OS of the node.
For the nasshutdown command, refer to “Maintenance Tool ‘2.28 Terminating the OS of This Side Node (nasshutdown)’ (MNTT 02-1740)”.

(6) Execute “sudo nasshutdown” at the node 1 to stop the OS of the node.
For the nasshutdown command, refer to “Maintenance Tool ‘2.28 Terminating the OS of This Side Node (nasshutdown)’ (MNTT 02-1740)”.

Copyright © 2014, Hitachi, Ltd.

3.2.5 Removing cables

NOTE: When removing LAN cables and FC cables, take some measures like labeling so that the ports to which the cables were connected can be judged.

(1) Request the system administrator to remove the LAN cable connected to the data port of the previous node.

(2) Remove the LAN cable connected to the management port, heart beat port, and maintenance port of the previous node, and the FC cable connected to the FC port of the previous node.

3.2.6 Removing the previous node

Get down the previous node from the rack.

Copyright © 2014, Hitachi, Ltd.

3.3 Preparing replacement [the new node]

3.3.1 Installing the new node

Put the rack rail on the new node and mount the new node on the rack.

3.3.2 Connecting cables

(1) Request the system administrator to connect the LAN cable to the data port of the new node.
When the system administrator does not know the port to be connected, refer to Table 3.3.2-1 that shows corresponding data port names of the new node and previous node and "A.2.2.2 Port arrangement and port names" of each model to inform the port position to be connected.

Table 3.3.2-1 Data Port Correspondence Table

#	Dell™ PowerEdge™ R710	CR220AK	CR210HM	D51B-2U
1	eth0	eth12	eth0	eth8
2	eth1	eth13	eth1	eth9
3	eth2	eth14	eth2	eth10
4	eth3	eth15	eth3	eth11

When the previous node is CR220AK and the new node is CR210HM, eth12 of the previous node is eth0 for the new node.

(2) Connect the LAN cable to the management port, heart beat port, BMC port and maintenance port of the new node. Also, connect the FC cable to the FC port.

The management port (mng0), heart beat port (hb0), BMC port (bmc0) and maintenance port (pm0) have the same port name also at the new node. Refer to "A.2.2.2 Port arrangement and port names" of each model to connect.

For the FC port, Table 3.3.2-2 shows the correspondence of the new node and previous node. Refer to "A.2.2.2 Port arrangement and port names" of each model to connect.

Table 3.3.2-2 FC Port Name Correspondence Table

#	Physical port name	Dell™ PowerEdge™ R710	CR220AK	CR210HM	D51B-2U
1	0	fc0004	fc0002	fc0004	fc0002
2	1	fc0005	fc0003	fc0005	fc0003

If the previous node is CR220AK and the new node is CR210HM, fc0002 of the previous node is fc0004 for the new node.

Copyright © 2014, 2015, Hitachi, Ltd.

3.3.3 Confirming setting information of the new node

Before reflecting the setting of the previous node into the new node, check setting information of the new node.

3.3.3.1 Confirming setting information of the node 0

(1) Turn on power of the node 0.
For how to turn on power, refer to "Installation '2.1.1 Procedure for turning on the power' (INST 02-0000)".

(2) Confirm the BIOS version of the node 0 and record it as a work memo.
For how to confirm, refer to "Set Up '7.1 BIOS Update Procedure' (SETUP 07-0000)".

(3) Confirm the BIOS firmware version of the node 0 and record it as a work memo.
For how to confirm, refer to "Set Up '8.1 BMC Setting Procedure' (SETUP 08-0010)".

(4) Confirm the WWN of the FC port at the node 0.
Refer to "B.5 Disk Setting" to record in [port name_2] and [WWN_2] of Addition, Subtraction and Relocation "Table 3.4.1-1 WWN Correspondence Table" (ADD 03-0080).

(5) Execute "sudo versionlist" at the node 0 to confirm the OS version.
Refer to "Maintenance Tool '2.34 Displaying the Version of the OS (versionlist)' (MNTT 02-2060)" to confirm the OS version. When the OS version is different from the planned, stop the work and contact the system administrator.

(6) Execute "sudo bmcctl" at the node 0 to confirm BMC interface information.
Compare the setting information with information of "bmcctl_0.txt" saved in the Maintenance PC.
When the settings are different, set information of "bmcctl_0.txt".
For BMC interface information, refer to "Maintenance Tool '2.18 Setting BMC LAN Information (bmcctl)' (MNTT 02-1210)".

(7) Execute "sudo hwstatus" at the node 0 to confirm the hardware status.
Confirm if hardware output results (Fan Information, Temperature Information, Power Supply Information, Memory Information, and Internal HDD Information) are "ok" or "installed".

For the hwstatus command, refer to "B.3.1 Displaying the Hardware Status (hwstatus)".

(8) Execute "sudo hwstatus" at the node 0 to confirm the BMC connection status.
Confirm "status" of "BMC information" displayed on screen is "ok" and "connection" is "none".
For the hwstatus command, refer to "B.3.1 Displaying the Hardware Status (hwstatus)".

(9) Refer to the time of the previous node configured in the Maintenance PC and execute the timeset command to set time of the node 0.
For setting time, refer to "Maintenance Tool '2.43 Time Setting (timeset)' (MNTT 02-2470)".

Copyright © 2014, Hitachi, Ltd.

3.3.3.2 Confirming setting information of the node 1

(1) Turn on power of the node 1.
For how to turn on power, refer to "Installation '2.1.1 Procedure for turning on the power' (INST 02-0000)".

(2) Confirm the BIOS version of the node 1 to record as a work memo.
For how to confirm, refer to "Set Up '7.1 BIOS Update Procedure' (SETUP 07-0000)"

(3) Confirm the BMC firmware version of the node 1 to record as a work memo.
For how to confirm, refer to "Set Up '8.1 BMC Setting Procedure' (SETUP 08-0010)".

(4) Confirm the WWN of the FC port at the node 1.
Refer to "B.5 Disk Setting" to record in [port name_2] and [WWN_2] of Addition, Subtraction and Relocation "Table 3.4.1-1 WWN Correspondence Table" (ADD 03-0100).

(5) Execute "sudo versionlist" at the node 1 to confirm the OS version.
Refer to "Maintenance Tool '2.34 Displaying the Version of the OS (versionlist)' (MNTT 02-2060)" to confirm the OS version. When the OS version is different from the planned, stop the work and contact the system administrator.

(6) Execute "sudo bmcctl" at the node 1 to confirm BMC interface information.
Compare the setting information with "bmcctl_1.txt" information saved in the Maintenance PC.
When the setting is different, set "bmcctl_1.txt" information.
For setting BMC interface information, refer to "Maintenance Tool '2.18 Setting BMC LAN Information (bmcctl)' (MNTT 02-1210)".

(7) Execute "sudo hwstatus" at the node 1 to confirm the hardware status.
Confirm if hardware output results (Fan Information, Temperature Information, Power Supply Information, Memory Information, and Internal HDD Information) are "ok" or "installed".

For the hwstatus command, refer to "B.3.1 Displaying the Hardware Status (hwstatus)".

(8) Execute "sudo hwstatus" at the node 1 to confirm the BMC connection status.
Confirm "status" of "BMC information" displayed on screen is "ok" and "connection" is "none".
For the hwstatus command, refer to "B.3.1 Displaying the Hardware Status (hwstatus)".

(9) Refer to the time of the previous node configured in the Maintenance PC and execute the timeset command to set time of the node 1.
For setting time, refer to "Maintenance Tool '2.43 Time Setting (timeset)' (MNTT 02-2470)".

Copyright © 2014, 2016, Hitachi, Ltd.

3.4 Reconfiguring disk array devices and the FC-SW

Reconfigure disk array devices and the FC-SW to confirm connection between nodes and disk array devices.

3.4.1 Reconfiguring FC-HBA information registered in disk array devices

The following are procedures when the disk array device is the USP V, USP VM, VSP, VSP Gx00/VSP Fx00, or HUS VM.

If LUN security of the disk array device is enabled, reconfiguration is needed.

For the USP V or USP VM, refer to “Storage Navigator User’s Guide”.
For the VSP, refer to “Provisioning Guide for Open Systems”.
For the VSP Gx00/VSP Fx00 or HUS VM, refer to “Provisioning Guide”.

(1) Confirm LUN security of the disk array device.
When LUN security is “Enabled”, go to the procedure (2).
When “Disabled”, go to “3.4.2 Reconfiguring FC-HBA information registered in the FC-SW”.

(2) Record “HostPort” and “HostPortWWN” written in fpstatus_0.txt and fpstatus_1.txt that are saved in the Maintenance PC, in [port name_1] and [WWN_1] of Table 3.4.1-1.
Refer to Addition, Subtraction and Relocation “Table 3.3.2-2 FC Port Correspondence Table” (ADD 03-0070) to record in the line corresponding to [port name] of the new node.

(3) Refer to Table 3.4.1-1 and update the WWN of the previous node registered in each host group of disk array devices to the WWN of the new node.

Table 3.4.1-1 WWN Correspondence Table

#	node	the previous node		the new node	
		port name_1	WWN_1	port name_2	WWN_2
1	Node 0				
2					
3	Node 1				
4					

3.4.2 Reconfiguring FC-HBA information registered in the FC-SW

The following is a necessary procedure for the configuration to connect to the disk array devices through the FC-SW.

Reconfigure when the FC-SW zoning is the WWN zoning.

(1) Request the system administrator to reconfigure the zoning in [WWN_2] of Table 3.4.1-1.

Copyright © 2014, 2016, Hitachi, Ltd.

3.4.3 Confirming connection between the new nodes and disk array devices

Confirm connection to disk array devices at the node 0 and node 1.

3.4.3.1 Confirming connection between the node 0 and disk array devices

(1) Reboot the node 0.
For rebooting, refer to "Maintenance Tool '2.29 Rebooting the OS of This Side Node (nasreboot)' (MNTT 02-1790)".

(2) Execute "sudo fpstatus -v" at the node 0.
Confirm the port name, serial number, and FC path status of the disk array device are identical with fpstatus_0.txt saved in the Maintenance PC.
For the fpstatus command, refer to "Maintenance Tool '2.5 Displaying the FC Status (fpstatus)' (MNTT 02-0280)".

(3) Execute "sudo fpstatus --lupath" at the node 0.
Confirm the number of the lines that displays "N0-TXXX" in "Target" and information of the disk array device are identical with fpstatus_lupath_0.txt saved in the Maintenance PC. For information of the disk array device, refer to Figure 3.4.3.1-1.
For the fpstatus command, refer to "Maintenance Tool '2.5 Displaying the FC Status (fpstatus)' (MNTT 02-0280)".

```
$ sudo fpstatus --lupath
Model      Serial  LDEV(  hex)  ArrayPort  Target    HostPort  HostPortWWN       Status   Mismatch
AMS     83018368      0(  0000)  0B        N0-T000   fc0002    10000000c9951dec  Online   -
AMS     83018368      0(  0000)  1B        N0-T000   fc0003    10000000c995318b  Online   -
AMS     83018368      0(  0000)  0A        N1-T001   fc0002    10000000c9952a94  Online   -
AMS     83018368      0(  0000)  1A        N1-T001   fc0003    10000000c9952e27  Online   -
AMS     83018368      1(  0001)  0B        N0-T000   fc0002    10000000c9951dec  Online   -
AMS     83018368      1(  0001)  1B        N0-T000   fc0003    10000000c995318b  Online   -
AMS     83018368      1(  0001)  0A        N1-T001   fc0002    10000000c9952a94  Online   -
AMS     83018368      1(  0001)  1A        N1-T001   fc0003    10000000c9952e27  Online   -
AMS     83018368      2(  0002)  0B        N0-T000   fc0002    10000000c9951dec  Online   -
AMS     83018368      2(  0002)  1B        N0-T000   fc0003    10000000c995318b  Online   -
AMS     83018368      2(  0002)  0A        N1-T001   fc0002    10000000c9952a94  Online   -
AMS     83018368      2(  0002)  1A        N1-T001   fc0003    10000000c9952e27  Online   -
AMS     83018368      3(  0003)  0B        N0-T000   fc0002    10000000c9951dec  Online   -
AMS     83018368      3(  0003)  1B        N0-T000   fc0003    10000000c995318b  Online   -
AMS     83018368      3(  0003)  0A        N1-T001   fc0002    10000000c9952a94  Online   -
AMS     83018368      3(  0003)  1A        N1-T001   fc0003    10000000c9952e27  Online   -
```

Figure 3.4.3.1-1 Example of Execution Results of the fpstatus command

Copyright © 2014, Hitachi, Ltd.

3.4.3.2 Confirming connection between the node 1 and disk array devices

(1) Reboot the node 1.
For rebooting, refer to "Maintenance Tool '2.29 Rebooting the OS of This Side Node (nasreboot)' (MNTT 02-1790)".

(2) Execute "sudo fpstatus -v" at the node 1.
Confirm the port name, serial number, and FC path status of the disk array device are identical with fpstatus_1.txt saved in the Maintenance PC.
For the fpstatus command, refer to "Maintenance Tool '2.5 Displaying the FC Status (fpstatus)' (MNTT 02-0280)".

(3) Execute "sudo fpstatus --lupath" at the node 1.
Confirm the number of the lines that displays "N1-TXXX" in "Target" and information of the disk array device are identical with fpstatus_lupath_1.txt saved in the Maintenance PC. For information of the disk array device, refer to Figure 3.4.3.1-2.
For the fpstatus command, refer to "Maintenance Tool '2.5 Displaying the FC Status (fpstatus)' (MNTT 02-0280)".

```
$ sudo fpstatus --lupath
Model      Serial  LDEV(  hex)  ArrayPort  Target    HostPort  HostPortWWN       Status   Mismatch
AMS     83018368      0( 0000)  0B        N0-T000   fc0002    10000000c9951dec  Online   -
AMS     83018368      0( 0000)  1B        N0-T000   fc0003    10000000c995318b  Online   -
AMS     83018368      0( 0000)  0A        N1-T001   fc0002    10000000c9952a94  Online   -
AMS     83018368      0( 0000)  1A        N1-T001   fc0003    10000000c9952e27  Online   -
AMS     83018368      1( 0001)  0B        N0-T000   fc0002    10000000c9951dec  Online   -
AMS     83018368      1( 0001)  1B        N0-T000   fc0003    10000000c995318b  Online   -
AMS     83018368      1( 0001)  0A        N1-T001   fc0002    10000000c9952a94  Online   -
AMS     83018368      1( 0001)  1A        N1-T001   fc0003    10000000c9952e27  Online   -
AMS     83018368      2( 0002)  0B        N0-T000   fc0002    10000000c9951dec  Online   -
AMS     83018368      2( 0002)  1B        N0-T000   fc0003    10000000c995318b  Online   -
AMS     83018368      2( 0002)  0A        N1-T001   fc0002    10000000c9952a94  Online   -
AMS     83018368      2( 0002)  1A        N1-T001   fc0003    10000000c9952e27  Online   -
AMS     83018368      3( 0003)  0B        N0-T000   fc0002    10000000c9951dec  Online   -
AMS     83018368      3( 0003)  1B        N0-T000   fc0003    10000000c995318b  Online   -
AMS     83018368      3( 0003)  0A        N1-T001   fc0002    10000000c9952a94  Online   -
AMS     83018368      3( 0003)  1A        N1-T001   fc0003    10000000c9952e27  Online   -
```

Figure 3.4.3.1-2 Example of Execution Results of the fpstatus command

Copyright © 2014, 2016, Hitachi, Ltd.

3.5 Reflecting system setting information of the previous node into the new node

3.5.1 Cluster construction by the system administrator

Request the system administrator to restore the system setting information and construct the cluster. Table 3.5.1-1 shows works to be requested to the system administrator.

Table 3.5.1-1 System Administrator Work

#	System administrator work	Note
1	Upload the system setting information file downloaded to the Management PC to the new node.	—
2	Restore the system setting information.	—
3	Define the cluster.	—
4	Configure the data port, Trunking, and interfaces.	When the system administrator does not know the data port of the new node, refer to iflist_0.txt and Addition, Subtraction and Relocation "Table 3.3.2-2 Data Port Correspondence Table" (ADD 03-0070) to inform the system administrator of data port names of the previous node and new node. Also, inform to confirm the configured data port links up.
5	Set routing information. (Request to configure if necessary as some configuration does not need a setting)	When the system administrator does not know routing information, refer to routelist_0.txt to inform the system administrator of the address of the [IPv4] default gateway.
6	Start the cluster/nodes/resource groups.	—

3.5.2 Confirming resource groups and user LUs by the maintenance personnel.

(1) Execute "sudo clstatus" at the node 0 to confirm "Node status" is "UP".
For the clstatus command, refer to "Maintenance Tool '2.2 Displaying the Cluster Status (clstatus)' (MNTT 02-0040)".

(2) Execute "sudo lumaplist -v" at the node 0 to confirm LU information is identical with the content of lumaplist_0.txt saved in the Maintenance PC.
For the lumaplist command, refer to "Maintenance Tool '2.65 User LU Mapping Display (lumaplist)' (MNTT 02-3470)".

(3) Execute "sudo syseventlist" at the node 0 to confirm if a failure SIM is not shown.
For the syseventlist command, refer to "Maintenance Tool '2.6 Displaying SIMs on This Side (syseventlist)' (MNTT 02-0360)".

(4) Execute "sudo lumaplist -v" at the node 1 to confirm LU information is identical with the content of lumaplist_1.txt saved in the Maintenance PC.
For the lumaplist command, refer to "Maintenance Tool '2.65 User LU Mapping Display (lumaplist)' (MNTT 02-3470)".

(5) Execute "sudo syseventlist" at the node 1 to confirm if a failure SIM is not shown.
For the syseventlist command, refer to "Maintenance Tool '2.6 Displaying SIMs on This Side (syseventlist)' (MNTT 02-0360)".

3.5.3 Confirming access to user data

Request the system administrator to confirm clusters, resource group status, and access from the client to user data.

Copyright © 2014, 2016, Hitachi, Ltd.