Installation

Chapter 1 Installing Hitachi Data Ingestor ····· INST 01-0000
Chapter 2 Procedure for Turning on and off the Power ····· INST 02-0000
Chapter 3 Setting the Tape Library ····· INST 03-0000
Chapter 4 Overview of VLAN Setting Procedure for the Management LAN IP-SW ····· INST 04-0000

Copyright © 2010, 2012, Hitachi, Ltd.

This page is for editorial purpose only.

Copyright © 2010, Hitachi, Ltd.

Chapter 1 Installing Hitachi Data Ingestor

1.1 Installing Hitachi Data Ingestor

1.1.1 Overview

This section provides the installation procedure of the Hitachi Data Ingestor (hereinafter called HDI) and the initial setup procedure to be executed by the system administrator after the device installation.
After installing the system in accordance with the HDI installation procedure, request the system administrator to perform the initial setup procedure.
In the initial setup procedure includes the operation that Data port of node is assumed in the state of Link Up. Therefore, request the system administrator to make Link Up the Data port before the initial setup procedure.

In the configuration of HDI for HCP, it is also assumed that the installation of HCP has been completed before the installation of HDI.

NOTE: When shipping HDI with customer settings completed on the nodes of which the OS is installed, request the system administrator to indicate information about the IP addresses of the Private Maintenance ports.

(1) In the cluster node configuration

Table 1.1.1-1 shows the installation procedure of the HDI in the cluster configuration, and Table 1.1.1-2 The initial setup operation of cluster configuration to be executed by the system administrator (INST 01-0011) shows the procedure to be executed by the system administrator after the device installation.

Table 1.1.1-1 HDI Installation operation procedure in the cluster node configuration (1/2)

#	Operating contents	CTO Operation	Local Operation	Reference
1	Procedure before the newly installation of the first node (BMC setting)	Y	N	There is no place to be referred because it is not the operation for maintenance personnel.
2	Confirmation of the first node status before the installation	Y	N	
3	OS installation of the first node. (Including the BIOS version confirmation)	Y	N	
4	Procedure before the newly installation of the second node. (BMC setting)	Y	N	
5	Confirmation of the second node status before the installation	Y	N	
6	OS installation of the second node (Including the BIOS version confirmation)	Y	N	
7 (*)	First phase configuration of management LAN IP-SW (The setting on the side of management LAN is tentative)	Y	N	
8	OS version confirmation for the both nodes (Skip the setting of management port IP address at the time of first logging.)	Y	N	
9	Confirmation of the hardware status of the both nodes	Y	N	

*: This item is not performed if an IP-SW owned by the customer is used as the management LAN.

Copyright © 2011, 2012, Hitachi, Ltd.

Table 1.1.1-1 HDI Installation operation procedure in the cluster node configuration (2/2)

#	Operating Contents	CTO operation	Local operation	Reference
10	Device delivery	N	Y	—
11	Unpacking and installing of rack frame	N	Y	—
12	Unpacking and installing of node	N	Y	Installation "1.1.6 Installing the nodes" (INST 01-0080)
13	Setting the Disk Array Subsystem	N	Y	"Disk Setting 'Chapter 1 Overview of Disk Settings' (DSKST 01-0000)"
14 (*)	Setting of management LAN IP-SW (Resetting it to make match with the management port IP address specified by the customer)	N	Y	Installation "Chapter 4 Overview of VLAN Setting Procedure for the Management LAN IP-SW" (INST 04-0000)
15	Connecting cables • Fibre Channel cables • LAN cable • KVM/ Remote Console • Power cables to the nodes	N	Y	• Installation "1.1.4 Overall configuration diagram" (INST 01-0070) • Installation "1.1.5 Port arrangement and port names of the node" (INST 01-0080) • Installation "1.1.7 Connecting fibre channel interface cables" (INST 01-0081) • Installation "1.1.8 Connecting the LAN cable" (INST 01-0130)
16	Turning on the AC power of the nodes	N	Y	Installation "2.1.1 Procedure for turning on the power 2.1.1.1 (1) Starting the OS of a node" (INST 02-0000)
17	Setting the management port IP address and BMC IP address (Set with the IP address specified by the customer)	N	Y	"SET UP '5.1 Setting/Confirmation after New Installation 5.1.1 (1)' (SETUP 05-0000)"
18	Confirmation of the firmware version • HBA firmware • RAID controller firmware	N	Y	"SET UP '5.1 Setting/Confirmation after New Installation 5.1.1 (6) (7)' (SETUP 05-0050)"
19	Check the node statuses • Hardware status • LU mapping • FC path status	N	Y	• "SET UP '5.1 Setting/Confirmation after New Installation 5.1.1 (8)' (SETUP 05-0050)" • "SET UP '5.1 Setting/Confirmation after New Installation 5.1.1 (9)' (SETUP 05-0060)" • "SET UP '5.1 Setting/Confirmation after New Installation 5.1.1 (10)' (SETUP 05-0060)"

*: This item is not performed if an IP-SW owned by the customer is used as the management LAN.

Copyright © 2011, 2012, Hitachi, Ltd.

Table 1.1.1-2 The initial setup operation of cluster configuration to be executed by the system administrator

#	Operating contents	CTO operation	Local operation	reference
1	Set the device using Hitachi File Services Manager (1) Register the system administrator (2) Set the cluster (3) Set the service-related configuration (4) Set the network for the data LAN ports (5) Set the network (DNS and NIS) (6) Specify a user and group (7) Create a file system (8) Specify file shares (9) Specify settings related to the failure monitoring function	N	Y	—
2	Mount from the NFS or CIFS client	N	Y	—

Copyright © 2011, Hitachi, Ltd.

(2) In the single node configuration

(2-1) When not using the disk array subsystem in the single node configuration
Table 1.1.1-3 shows the installation operation procedure of the HDI in the single node configuration when not using the disk array subsystem, and Table 1.1.1-4 shows the procedure to be executed by the system administrator after the device is installed.

Table 1.1.1-3 HDI Installation operation procedure in the single node configuration (when not using the disk array subsystem)

#	Operating Contents	CTO operation	Local operation	Reference
1	Procedure before the newly installation of node (BMC setting)	Y	N	There is no place to be referred because it is not the operation for maintenance personnel.
2	Confirmation of the node status before the installation	Y	N	
3	OS installation of the node (Including the BIOS version confirmation)	Y	N	
4	OS version confirmation (Skip the setting of management port IP address at the time of first logging.)	Y	N	
5	Confirmation of the hardware status of node	Y	N	
6	Device delivery	N	Y	—
7	Unpacking and installing of rack frames	N	Y	—
8	Unpacking and installing of node	N	Y	Installation “1.1.6 Installing the nodes” (INST 01-0080)
9	Connecting cables • LAN cable • Power cables to the nodes	N	Y	• Installation “1.1.4 Overall configuration diagram” (INST 01-0070) • Installation “1.1.5 Port arrangement and port names of the node” (INST 01-0080) • Installation “1.1.8 Connecting the LAN cable” (INST 01-0130)
10	Turning on the AC power of the nodes	N	Y	Installation “2.1.1 Procedure for turning on the power 2.1.1.2 (1) Starting the OS of a node” (INST 02-0030)
11	Setting the management port IP address (Set with the IP address specified by the customer)	N	Y	“SET UP ‘5.1 Setting/Confirmation after New Installation 5.1.2 Setting and Confirming the Single Node Configuration (1)’ (SETUP 05-0071)”
12	Confirmation of the firmware version • RAID controller firmware	N	Y	“SET UP ‘5.1 Setting/Confirmation after New Installation 5.1.2 Setting and Confirming the Single Node Configuration (8)’ (SETUP 05-0079)”
13	Check the node statuses • Hardware status	N	Y	“SET UP ‘5.1 Setting/Confirmation after New Installation 5.1.2 Setting and Confirming the Single Node Configuration (9)’ (SETUP 05-0079)”

Copyright © 2011, 2012, Hitachi, Ltd.

Table 1.1.1-4 The initial setup operation of single node configuration operation to be executed by the system administrator (when not using the disk array subsystem)

#	Operating contents	CTO operation	Local operation	reference
1	Set the device using GUI for management (1) Set the service-related configuration (2) Set the network for the data LAN ports (3) Set the network (DNS and NIS) (4) Specify a user and group (5) Create a file system (6) Specify file shares (7) Specify settings related to the failure monitoring function	N	Y	—
2	Mount from the NFS or CIFS client	N	Y	—

Copyright © 2011, 2012, Hitachi, Ltd.

1.1.2 Before starting installation

Read the following confirmation items carefully before starting installation.

(1) Precautions on installing and removing parts
The precision parts are installed. When installing and removing those parts, avoid impact on them.

NOTICE

- **Before starting the operations, wear a wrist strap on your wrist and connect the earth clip at the other end of the cable connected to that wristband to the subsystem frame (metal part). Do not put off the wrist strap until the operation is completed.**
- **When installing a node, support the sheet-metal part with your hand wearing the wrist strap. Touching the sheet-metal part discharges static electricity.**

Copyright © 2011, Hitachi, Ltd.

(2) Precautions on cable routing

(a) Handling of cables laid on the installation floor

- Use cable protection ducts to protect cables that are drawn from the device onto the floor or that come across a walkway.
- Make sure that a relay cable between devices is laid on the floor without any suspension.

(b) Handling of cables installed under a free-access floor

- Provide a sufficient length of cable so that no cables are suspended above the ground.

(c) Routing method

- Considering earthquake, provide a sufficient length of cable for routing.
- Provide a sufficient length of cable for routing so that replacement work is not disturbed.
- When using a cable protection duct, be careful not to damage or disconnect the cable by, for example, letting it get caught.

(d) When inserting and unplugging a cable, hold the connector. Pulling the cable causes failure.

(e) When connecting an FC cable, bend the cable with a large bend radius (R) that is equal to or greater than 70 mm to prevent load on the cable and connector.
This operation is not necessary for the single node configuration.

(3) Precaution during startup of a node
During startup of a node, the device power-off status is in the process of changing to the device power-on status. Do not perform the following during startup of a node.

- Installing and removing parts
- Inserting and unplugging a cable

Copyright © 2011, Hitachi, Ltd.

1.1.3 Installation Tools

The installation requires the following tools.

Table 1.1.3-1 Installation Tools

Category	Name	Quantity	Specification and Others	Remarks
Tool	—	—	—	Prepare tools that can maintain the parts of a subject model. For more details, refer to the maintenance manual of the target model.
Others	Wrist strap	1	—	A strap for protecting the device from electrostatic discharge
	LAN cable	1	Category 5 / 5E (Straight cable)	Used for connecting the maintenance PC and the device
	Maintenance PC	1	—	For details about the maintenance PC requirements, refer to "Maintenance Tool '1.2.1 Table 1.2.1-1 Requirements for the Maintenance PC' (MNTT 01-0030)".
	RS-232C crossover cable	1	Serial 9-pin	The RS-232C crossover cable is used for performing the VLAN setting of the management LAN IP-SW. For the VLAN setting, refer to Installation "Chapter 4 Overview of VLAN Setting Procedure for the Management LAN IP-SW" (INST 04-0000). In the single node configuration, it is used for the confirmation of OS console window (log in prompt) from the maintenance PC when executing maintenance.
	USB/ Serial conversion adapter cable	1	—	USB/ Serial conversion adapter cable is used with the RS-232C crossover cable when the device is connected to the maintenance LAN IP-SW.

Copyright © 2011, Hitachi, Ltd.

1.1.4 Overall configuration diagram

This chapter provides the system configuration where the HDI Series supports.
The management LAN IP-SW shown in the diagrams is an option when the OS version is 3.1.0-XX or later. When using management LAN IP-SW owned by the customer, request to connect the connection of 4 ports that are connected from the node and of 2 ports that are connected form the Disk Array to the customer's management LAN IP-SW.

(1) Overall system configuration diagram in the Basic Configuration
HDI does not support Basic Configuration.

Copyright © 2011, 2012, Hitachi, Ltd.

(2) Overall system configuration diagram in the configuration of HDI for HCP

(2-1) Connection with AMS2000 series and HUS100 series

Figure 1.1.4-6 shows the system configuration diagram of the configuration of HDI for HCP (Connection with AMS2000 series and HUS100 series). The maintenance PC is owned by the maintenance personnel. HCP and HDI share the front-end LAN, FC-SWs (FC switches), and disk array subsystem. For detailed instructions for the LAN connection, refer to "A.2.3 LAN Cable". For detailed instructions for the FC connection, refer to Installation "1.1.7 Connecting fibre channel interface cables" (INST 01-0081).

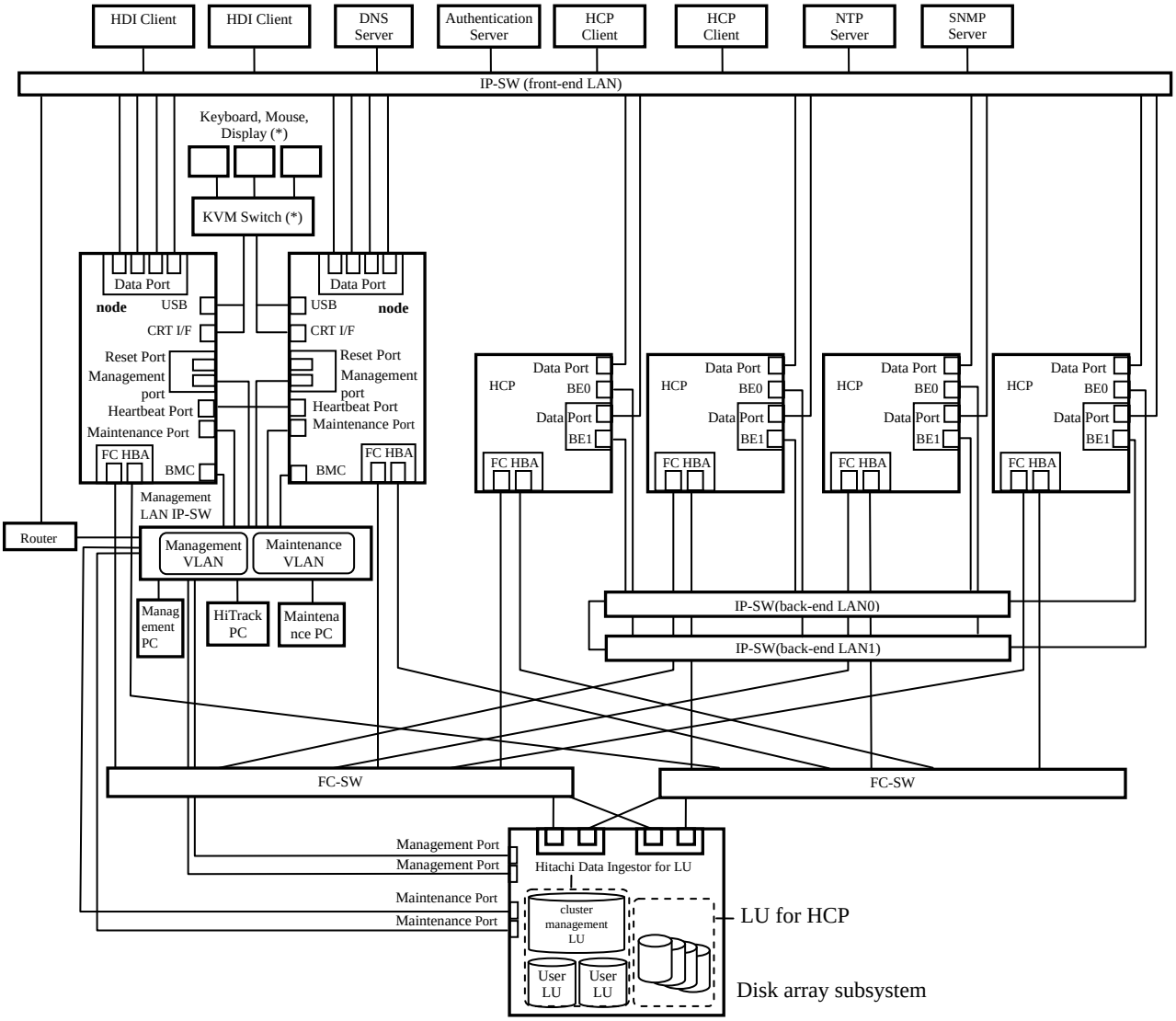

*: In the case node is HA8000 or D51B-2U, the remote console from the maintenance PC is used to access the node instead of KVM.

Figure 1.1.4-6 System Configuration Diagram of the Configuration of HDI for HCP (Connection with AMS2000 series and HUS100 series)

Copyright © 2011, 2015, Hitachi, Ltd.

Figure 1.1.4-7 shows the system configuration in the case of using the customer's management LAN IP-SW. Maintenance PC is used by connecting directly depending on the circumstances.
The customer's management LAN IP-SW can be used only in the case the node is HA8000 or D51B-2U.

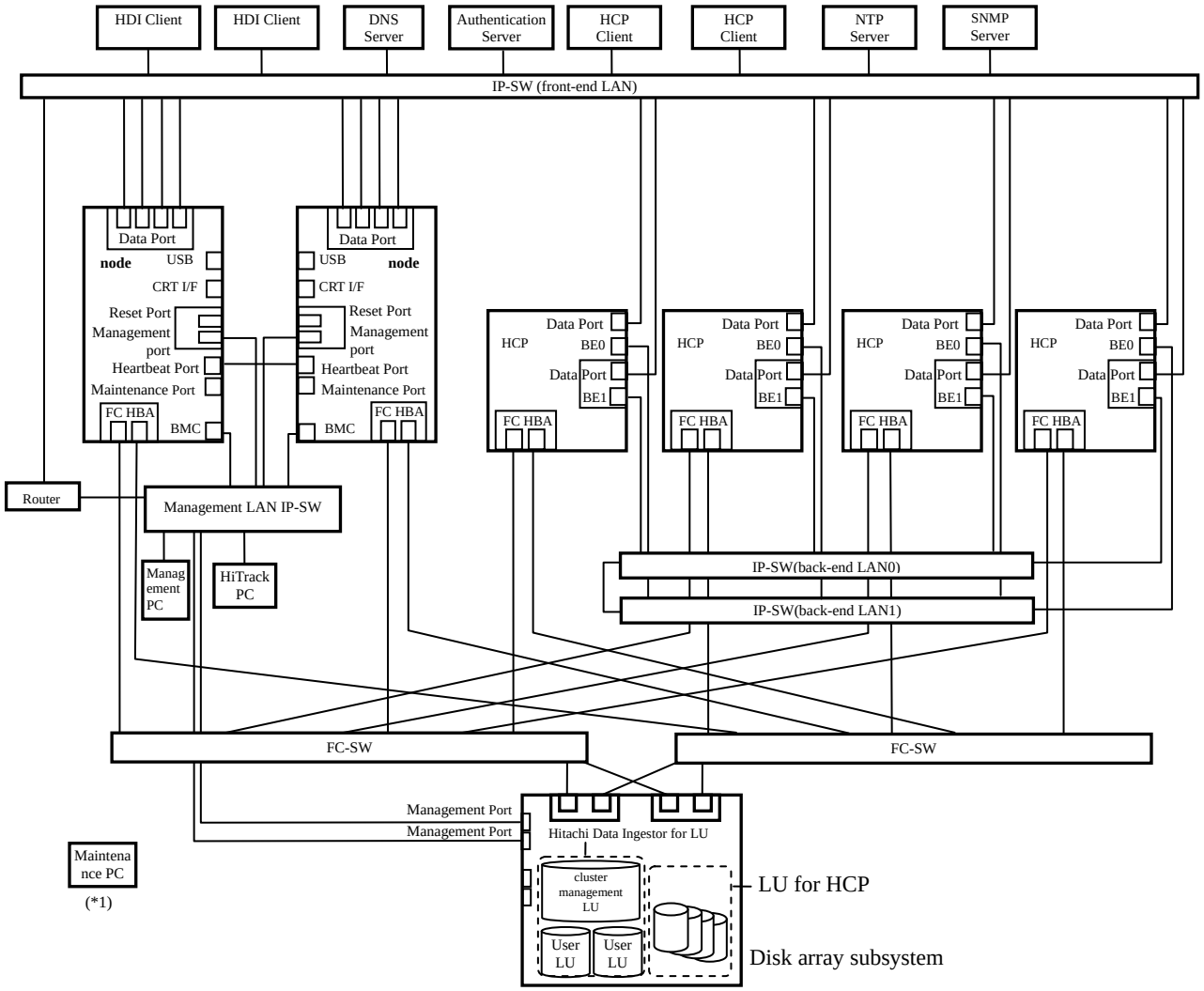

*1: When performing node maintenance, connect the maintenance PC directly to the target node.

Figure 1.1.4-7 System Configuration Diagram of the Configuration of HDI for HCP (In the case of using customer's Management LAN IP-SW)

Copyright © 2011, 2015, Hitachi, Ltd.

(2-2) With USP V, USP VM, VSP, VSP G1000, VSP Gx00/VSP Fx00, or HUS VM connection

Figure 1.1.4-8 shows the system configuration diagram of the configuration of HDI for HCP (with USP V, USP VM, VSP, VSP G1000, VSP Gx00/VSP Fx00, or HUS VM connection). In the Figure, the ranges of components provided by HDI and HCP are enclosed in lines. Other components are to be provided by the customer.

The maintenance PC is owned by the maintenance personnel.

HCP and Hitachi Data Ingestor share the front-end LAN, the FC-SWs (FC switches), and the disk array subsystem.

For detailed instructions for the LAN connection, refer to "A.2.3 LAN Cable".

For detailed instructions for the FC connection, refer to Installation "1.1.7 Connecting fibre channel interface cables" (INST 01-0081).

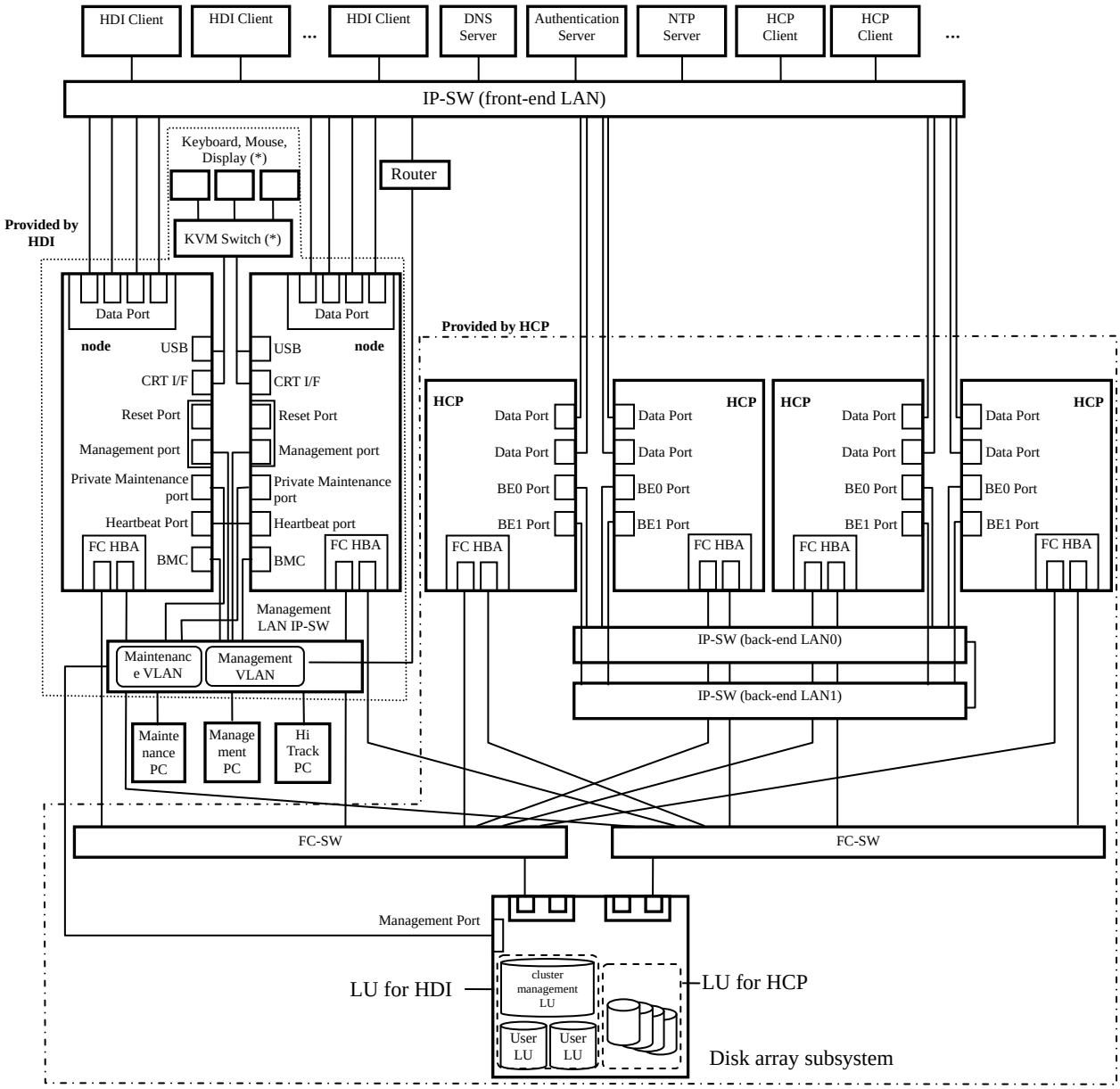

*: In the case node is HA8000 or D51B-2U, the remote console from the maintenance PC is used to access the node instead of KVM.

Figure 1.1.4-8 System Configuration Diagram in the Configuration of HDI for HCP (with USP V, USP VM, VSP, VSP G1000, VSP Gx00/VSP Fx00, HUS VM connection)

Copyright © 2011, 2016, Hitachi, Ltd.

Figure 1.1.4-9 shows the system configuration in the case of using the customer's management LAN IP-SW. Maintenance PC is used by connecting directly depending on the circumstances.
The customer's management LAN IP-SW can be used only in the case the node is HA8000 or D51B-2U.

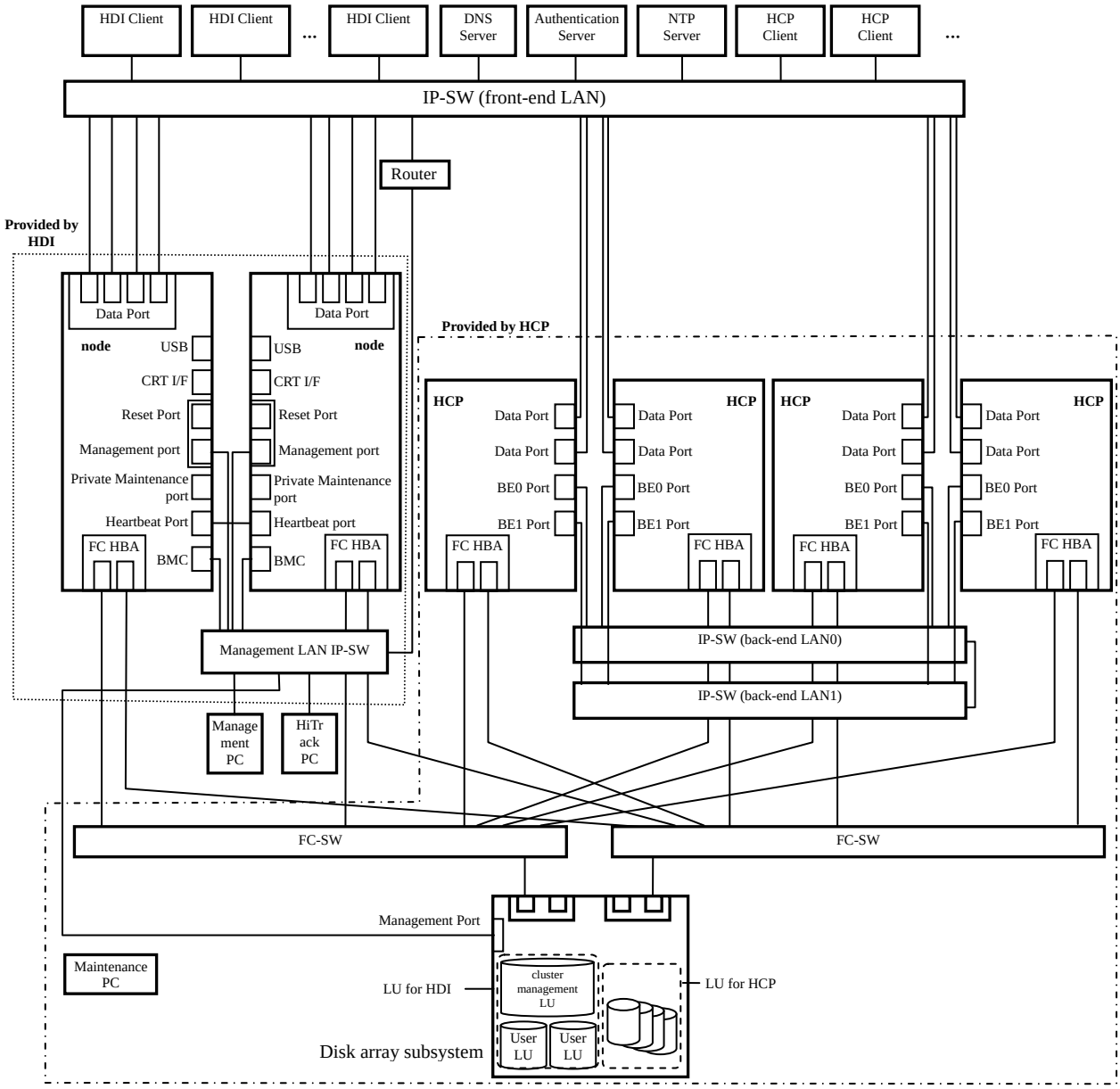

Figure 1.1.4-9 System Configuration Diagram in the Configuration of HDI for HCP (with USP V, USP VM, VSP, VSP G1000, VSP Gx00/VSP Fx00, HUS VM connection) [In the case of using customer's Management LAN IP-SW]

Copyright © 2011, 2016, Hitachi, Ltd.

(3) Overall system configuration diagram in the configuration of HDI for Cloud (cluster node)
In the figure, the ranges of components provided by the HDI of the configuration of HDI for Cloud and the network environment connected to the HDI (to be provided by the customer) are enclosed in frames. The maintenance PC is owned by the maintenance personnel.
The HCP side of the configuration of HDI for Cloud is assumed to be provided already.

The configuration of HDI for Cloud does not support the share of the disk array connecting to HDI site and the disk array connecting to HCP.
The concrete instruction of the LAN connection is shown in "A.2.3 LAN Cable" and the concrete instruction of the FC connection is shown in Installation "1.1.7 Connecting fibre channel interface cables" (INST 01-0081).

Figure 1.1.4-10 shows the overall system configuration diagram in the configuration of HDI for Cloud with BMC and management SW connection configuration.
Figure 1.1.4-11 shows the system configuration diagram in the Configuration of HDI for Cloud with the BMC direct connection configuration.

To use the customer's management LAN IP-SW in HDI site, configure the HDI site as same as the configuration shown in Figure 1.1.4-2.

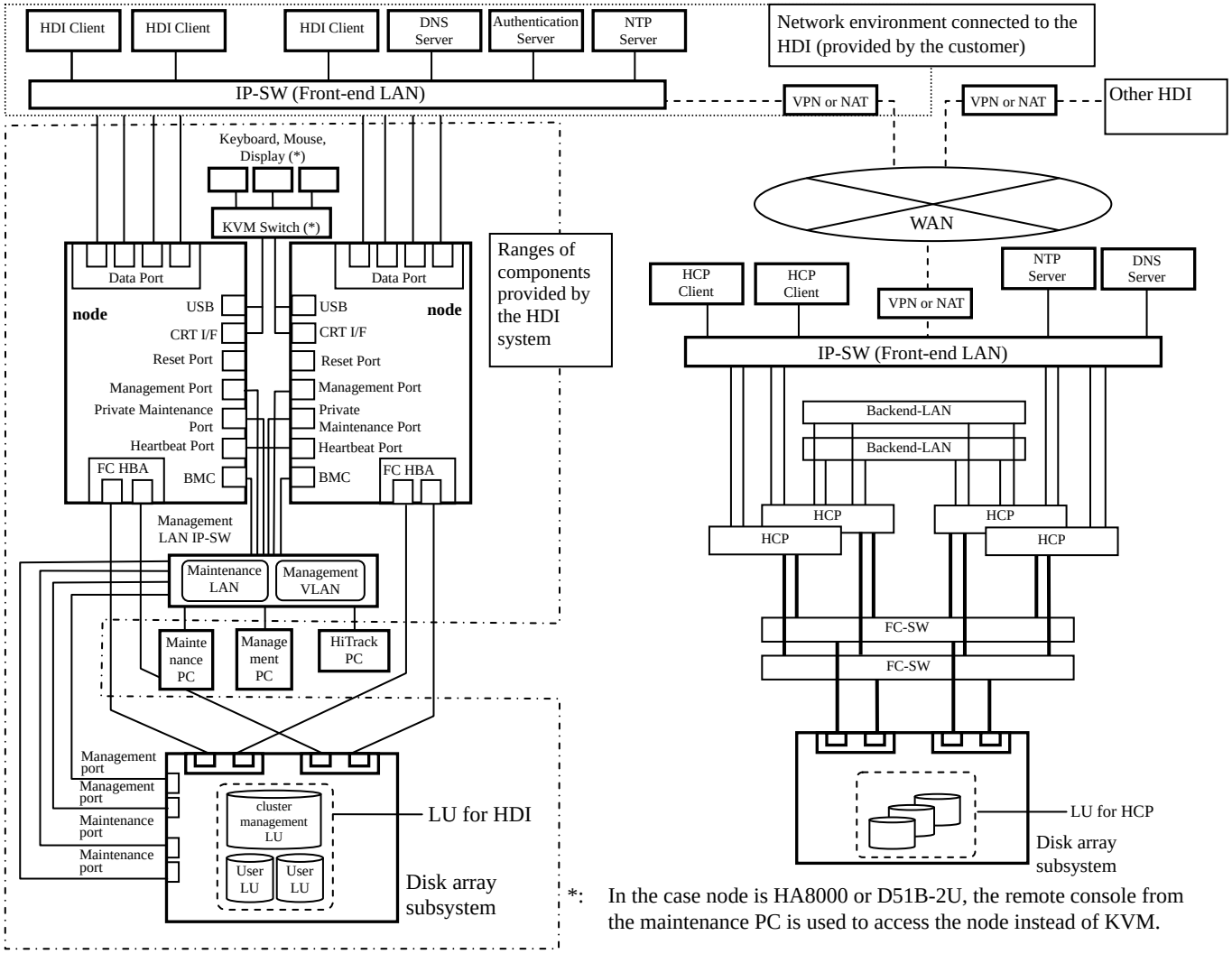

*: In the case node is HA8000 or D51B-2U, the remote console from the maintenance PC is used to access the node instead of KVM.

Figure 1.1.4-10 System Configuration Diagram in the Configuration of HDI for Cloud (cluster node, BMC and management SW connection configuration)

Copyright © 2011, 2015, Hitachi, Ltd.

"A.2.3 LAN Cable" shows the detailed instruction of the LAN connection, and Installation "1.1.7 Connecting fibre channel interface cables" (INST 01-0081) shows the detailed instruction of the FC connection.

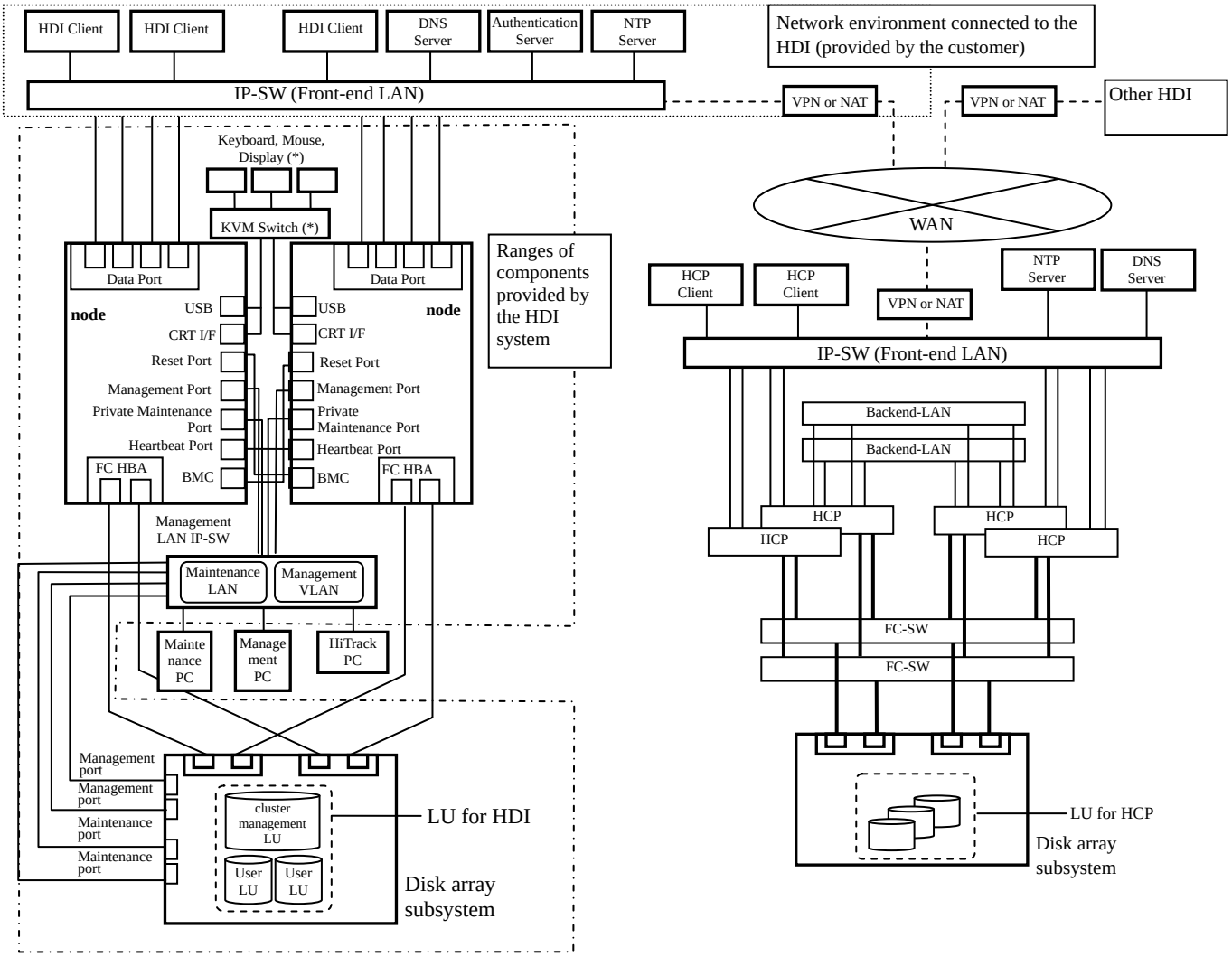

*: In the case node is HA8000, the remote console from the maintenance PC is used to access the node instead of KVM.

Figure 1.1.4-11 System Configuration Diagram in the Configuration of HDI for Cloud (cluster node, the BMC Direct Connection Configuration)

Copyright © 2014, Hitachi, Ltd.

(4) Overall system configuration diagram in the configuration of HDI for Cloud (single node) and the Configuration of the single node with spare for Cloud.
Single node configuration configures with just one node (In case of the Configuration of the single node with spare for Cloud, the Standby node is added).

- The system configuration diagram when connecting to front-end LAN by using data port is shown in Figure 1.1.4-12.
- Connecting to a front-end LAN can also be done by using a management port. In this case, replace the port that connects to the front-end LAN from the data port to the management port.
- The configuration of HDI for HCP (HDI connect to HCP via LAN, not WAN) is also supported with HDI single node.
- Configuration of the single node with spare for Cloud which connects the disk array subsystem is not supported.

More detailed instruction of the LAN connection is shown in the "A.2.3 LAN Cable".

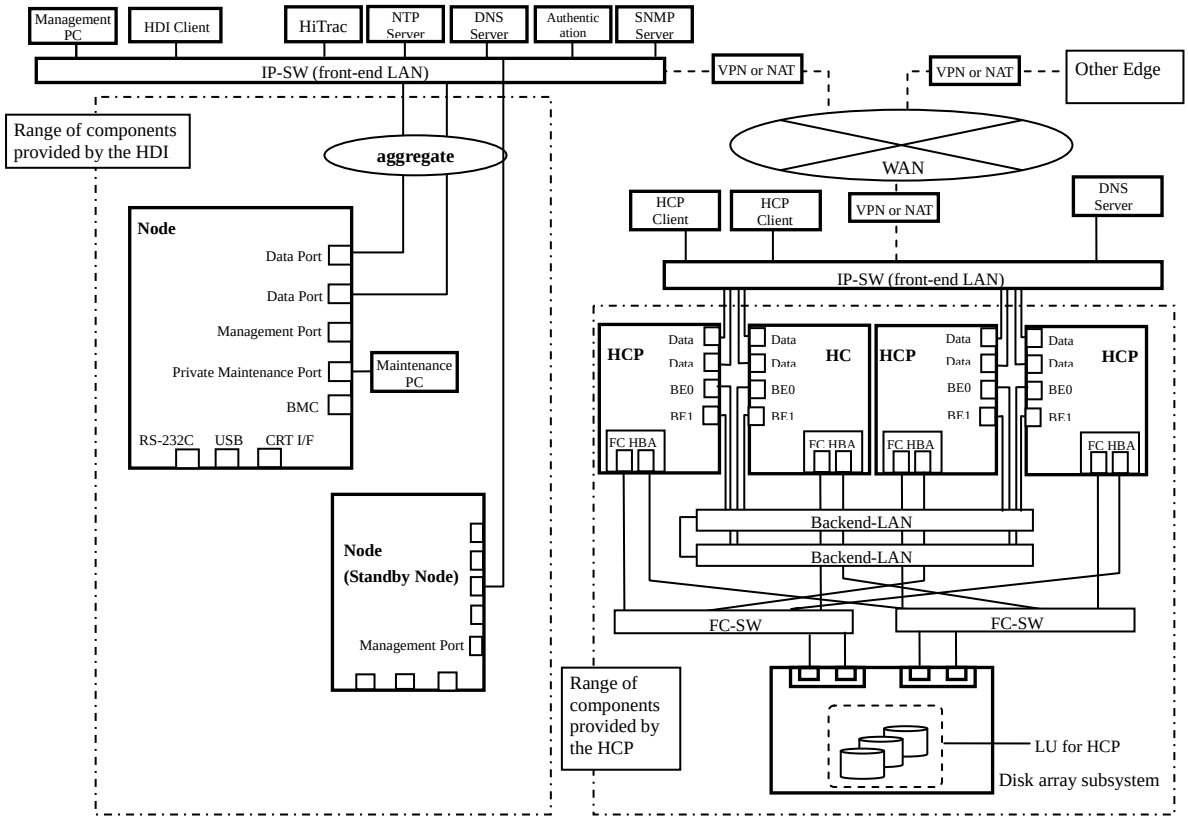

Figure 1.1.4-12 Configuration using trunk 2 Data ports

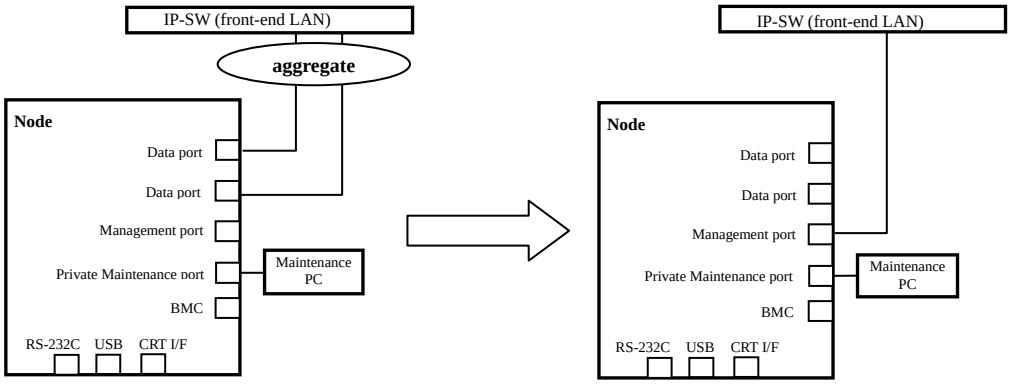

Figure 1.1.4-13 Case of using Management port

Copyright © 2011, 2013, Hitachi, Ltd.

1.1.5 Port arrangement and port names of the node

This section describes the port names on the backside node of HDI.

(1) In the cluster node configuration
For the port positions and the port names on the backside of the node in the cluster configuration, refer to "A.2.2.2 Port arrangement and port names (1) Node in the cluster configuration".

(2) In the single node configuration
For the port positions and the port names on the backside of the node in the single node configuration, refer to "A.2.2.2 Port arrangement and port names (2) Node in the single node configuration".

1.1.6 Installing the nodes

(1) Example of installing the node in the configuration of HDI for HCP (cluster node)
Refer to "A.4.3 Example of Installing the Node in the Configuration of HDI for HCP (cluster node)".

(2) Example of installing the node in the configuration of HDI for HCP (single node)
Refer to "A.4.4 Example of Installing the Node in the Configuration of HDI for HCP (single node)".

(3) Example of installing the node in the configuration of HDI for Cloud (cluster node)
Refer to "A.4.5 Example of Installing the Node in the Configuration of HDI for Cloud (cluster node)".

(4) Example of installing the node in the configuration of HDI for Cloud (single node)
Refer to "A.4.6 Example of Installing the Node in the Configuration of HDI for Cloud (single node)".

Copyright © 2011, 2012, Hitachi, Ltd.

1.1.7 Connecting fibre channel interface cables

The fibre channel interface is used as the storage interface.
The FC connection to be supported is different by the system configuration.

- The configuration of HDI for HCP supports the FC-SW connection only.
- The configuration of HDI for Cloud only supports the both FC-SW indirect connection and FC-SW direct connection.

Unless otherwise noted, make sure that the both OSs of nodes are terminated when you connect FC cables. For the OS termination of a node, refer to Installation “2.1.2 Procedures for turning off the power” (INST 02-0050).

NOTE: When connecting a fibre channel interface cable, bend the cable with a large bend radius (R) that is equal to or more than 70 mm to prevent load on the cable and connector.

Copyright © 2012, 2013, Hitachi, Ltd.

(1) FC connection example in the configuration of HDI for HCP

Figure 1.1.7-1 shows an FC connection example of the configuration of HDI for HCP.
In the configuration of HDI for HCP, only FC-SW connection is supported. Direct connection (no FW-SW connection) is unsupported.
Note that the port numbers of node 0 and node 1 in the figure show in the case the node model is HA8000 RS220xK. If the node model is Dell™ PowerEdge™ R710, read “fc0002” as “fc0004”, and read “fc0003” as “fc0005.”

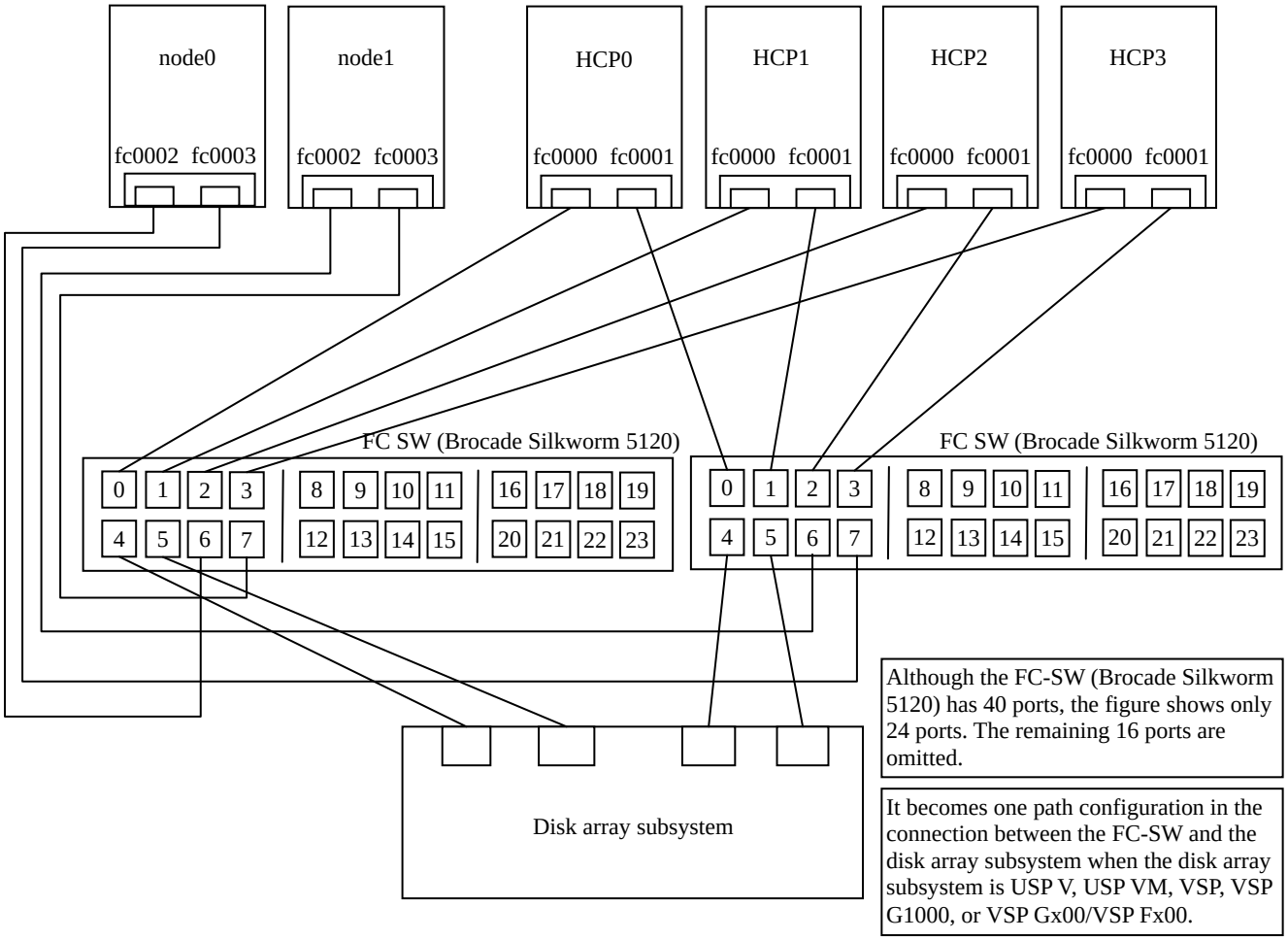

Figure 1.1.7-1 FC Connection Example in the Configuration of HDI for HCP

For the port number of FC port, refer to “A.2.2.2 Port arrangement and port names”.

Copyright © 2011, 2016, Hitachi, Ltd.

(2) FC connection example in the configuration of HDI for Cloud (HDI site)

Figure 1.1.7-2 shows the FC connection example of the configuration of HDI for Cloud.
The configuration of HDI for Cloud supports the both FC-SW indirect connection and FC-SW direct connection.
Note that the port numbers of node 0 and node 1 in the figure show in the case the node model is HA8000 RS220xK. If the node model is Dell™ PowerEdge™ R710, read “fc0002” as “fc0004”, and read “fc0003” as “fc0005.”

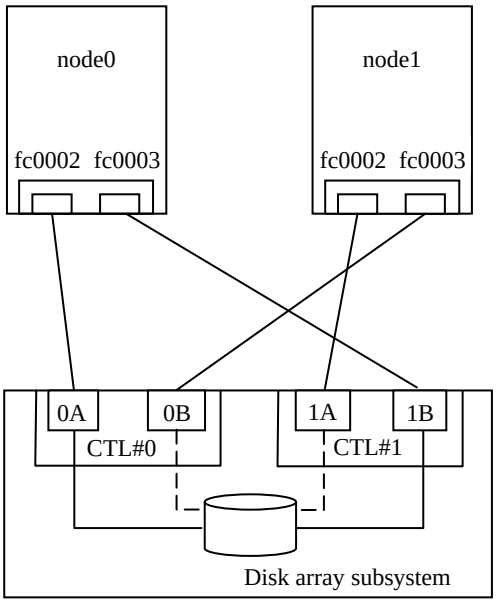

Figure 1.1.7-2 FC Connection Example in the Configuration of HDI for Cloud

For the port number of FC port, refer to “A.2.2.2 Port arrangement and port names”.

Copyright © 2011, 2013, Hitachi, Ltd.

This page is for editorial purpose only.

Copyright © 2011, 2012, Hitachi, Ltd.

This page is for editorial purpose only.

Copyright © 2011, 2012, Hitachi, Ltd.

1.1.8 Connecting the LAN cable

1.1.8.1 In the Case of Cluster Configuration shows the LAN cable connection when it is cluster configuration, and Installation “1.1.8.2 In the case of single node configuration” (INST 01-0140) shows when it is single node configuration.

1.1.8.1 In the case of Cluster Configuration

It is assumed that the management LAN IP-SW has VLAN settings.

For the VLAN setting of the management LAN IP-SW, refer to Installation “Chapter 4 Overview of VLAN Setting Procedure for the Management LAN IP-SW” (INST 04-0000). However, ask the system administrator for the setting in case (HDS) does not prepare a management LAN IP-SW.

Operations described in (1) though (4) must be performed by the maintenance personnel. Operations described in (5) and (6) must be performed by the customer.

Use the hwstatus command to check the Link up and Link speed after the connection of each LAN cable. Refer to “Maintenance Tool ‘2.3 Displaying the Hardware Status (hwstatus)’ (MNTT 02-0140)”.

(1) Connecting the management system network
Refer to “A.2.3.1 In the case of cluster configuration (1) Connecting the management system network”.

(2) Connecting the private maintenance ports
Refer to “A.2.3.1 In the case of cluster configuration (2) Connecting the private maintenance ports”.

(3) Connecting the heartbeat ports
Refer to “A.2.3.1 In the case of cluster configuration (3) Connecting the heartbeat ports”.

(4) Connecting the management LAN IP-SW and the disk array subsystem
Refer to “A.2.3.1 In the case of cluster configuration (4) Connecting the management LAN IP-SW and the disk array subsystem”.

(5) Connecting the front-end LAN
Refer to “A.2.3.1 In the case of cluster configuration (5) Connecting the front-end LAN”.

(6) Connecting the HiTrack PC
Refer to “A.2.3.1 In the case of cluster configuration (6) Connecting the HiTrack PC”.

Copyright © 2011, Hitachi, Ltd.

1.1.8.2 In the case of single node configuration

(1) is the operation to be executed by customer, and (2) is the operation to be executed by maintenance personnel. After connecting each LAN cable, execute hwstatus command to confirm Link up and Link speed. Refer to "Maintenance Tool '2.3 Displaying the Hardware Status (hwstatus)' (MNTT 02-0140)" for more detailed information.

(1) Front-end LAN connection
Refer to "A.2.3.2 In the case of single node configuration (1) Connecting the front-end LAN".

(2) Private Maintenance port connection
Refer to "A.2.3.2 In the case of single node configuration (2) Connecting the private maintenance ports".

Copyright © 2011, Hitachi, Ltd.

1.1.9 Front bezel installation and removal

CR210HM and CR220SM have a front bezel. Refer to “A.2.1 Front Side” for installation and removal of the front bezel.

Copyright © 2012, 2014, Hitachi, Ltd.

This page is for editorial purpose only.

Copyright © 2012, Hitachi, Ltd.

Chapter 2 Procedure for Turning on and off the Power

2.1 Procedure for Turning on and off the Power

This section describes the procedures for turning on and off the power for maintenance, assuming that the OS has already been installed.

In case of the configuration of HDI for HCP and the configuration of HDI for Cloud, the OS starts, assuming that HCP has already been started.

NOTE: For errors of starting/stopping the OS at the initial installation,
refer to "C.1.4 When the Maintenance Personnel Noticed the Failure at the Time of Initial Installation in the Local Site".
For errors of starting and stopping the OS during the system operation, refer to "Troubleshooting 'Chapter 2 Troubleshooting Flowchart' (TRBL 02-0000)".

2.1.1 Procedure for turning on the power

2.1.1.1 A case of Cluster node

(1) Starting the OS of a node

NOTE: When starting the OS of both nodes in a cluster from the planned shutdown status, start the OS of both nodes within 10 minutes. If there is a difference of 10 or more minutes between the start times, the node started later is performed failover to the first started node.

(a) If HDI operation has already started, ask the system administrator to confirm that the external servers connected to the nodes are running.
If the external servers connected to the nodes are not running, Hitachi File Server Manager outputs an error code at the time of its start-up.
Table 2.1.1.1-1 lists the error codes for the external servers.

For initial installation of a node, no external server has been connected. Proceed to step (b).

Table 2.1.1.1-1 List of External Server Error Codes

External server	Code when the external server is not connected
NTP	unusing NTP
NIS	unusing NIS
LDAP	unusing LDAP
DNS	unusing DNS
DC	unusing authentication server
KDC	unusing KDC server

(b) Confirm that the power supply lamp of the node is turned off.

(c) Confirm that the disk array subsystem, FC-SWs, and management LAN IP-SWs are running.

If you start the OS without running the disk array subsystem or FC-SWs, an FC path failure occurs. If the management LAN IP-SW is not running in the BMC and Management SW connection configuration, a communication error occurs between the nodes.

Copyright © 2011, 2012, Hitachi, Ltd.

NOTE: Starting confirmation by KVM / Remote Console is performed. Open the console window and then perform the step (d). For the connection of KVM/Remote Console, refer to "B.1.1 Confirmation of KVM Connection" or "B.1.4 Connection Confirmation of the Remote Console."

(d) Press the power button, and confirm that the power lamp lights up.
For the location of the power button, refer to "A.2.1 Front side".

While starting up the OS, the OS startup process may be suspended as the LILO Boot Menu window as shown in Figure 2.1.1.1-1 is displayed in the console window.
In that case, press Enter key and restart the OS.
If the OS does not start even if the [Enter] key is pressed, press the [Ctrl] + [Alt] + [Delete] keys to restart the node. If the remote console is used, press the [L] key while pressing the [Alt] key to restart the node.

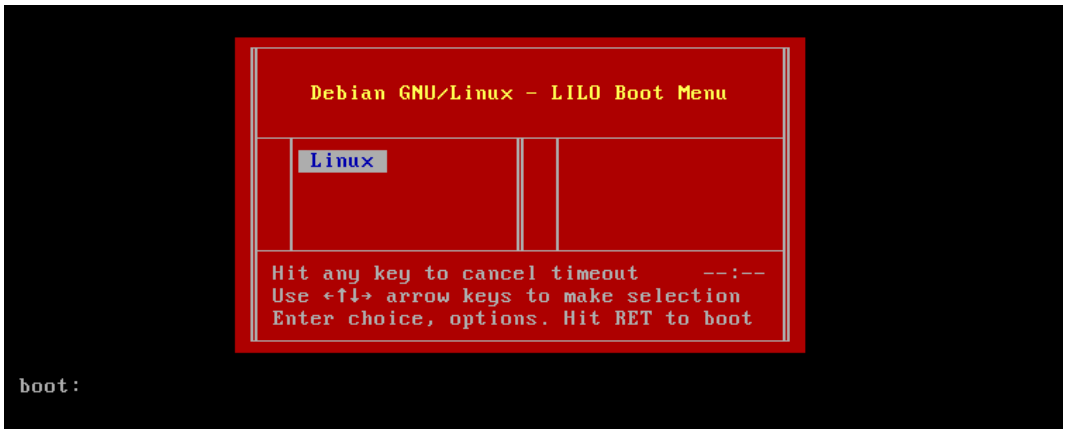

Figure 2.1.1.1-1 LILO Boot Menu Window

If the OS version is from 5.3.0-XX to 5.7.0-XX, otherwise, 6.0.0-XX or later, the progress of the OS startup is displayed. However if you press the [Alt] + [F3] keys, you can switch to the detailed information display of the OS startup. Also, you can switch to the progress display by pressing the [Ctrl] + [F1] keys.
When using the remote console and to switch the display, you need to use the [Alt] button in the tool bar located on the upper side of the console window instead of using the [Alt] key on the keyboard.

NOTE: A remote console has the restriction on the operation of the [Alt] key. If using the [Alt] key is indicated, take the following precautions.
- In the case of CR210HM, press the [Alt] + [Z] keys and operate other keys that require the [Alt] key while pressing the [Alt] key. After completing the operation, press the [Alt] + [Z] keys again to release the [Alt] key hold status.
- In the case of D51B-2U, refer to "QuantaGrid Series D51B-2U Technical Guide" to perform the key operations including the [Alt] key.

(e) Check the console window to confirm that the login prompt is displayed.

```
File Operating System (*1)

xxxxxxxx (device-serial-number) login:
```

*1: It is displayed as "Hitachi File Storage Linux" in the case the OS version is 3.0.1-XX or earlier.
It is not displayed in the case the OS version is 3.2.1-XX or later.

Figure 2.1.1.1-2 Login Prompt Window

Copyright © 2011, 2016, Hitachi, Ltd.

(2) Starting the OS of the other side node

NOTE:
- Start the OS of the other side node only when specific instructions are given.
- It is assumed that the node opposite to the node to be started is already started.

(a) Connect the maintenance PC to maintenance port of the target node and log in.
Refer to "Maintenance Tool '1.3 Procedures for Operating Commands' (MNTT 01-0200)" for the way of logging in.

(b) Execute the nasboot command of the node opposite to the node be started.
(Refer to "Maintenance Tool '2.27 Starting the OS of the Other Side Node (nasboot)' (MNTT 02-1700)").
Starting the OS requires about 10 minutes.

Copyright © 2011, 2012, Hitachi, Ltd.

2.1.1.2 A case of Single node

(1) Starting the OS of a node

(a) If HDI operation has already started, confirm the system administrator to confirm that the external servers connected to the nodes are running.
If the external servers connected to the nodes are not running, Hitachi File Server Manager outputs an error code at the time of its start-up.
Table 2.1.1.2-1 lists the error codes for the external servers.

For initial installation of a node, no external server has been connected. Proceed to step (b).

Table 2.1.1.2-1 List of External Server Error Codes

External server	Code when the external server is not connected
NTP	unusing NTP
NIS	unusing NIS
LDAP	unusing LDAP
DNS	unusing DNS
DC	unusing authentication server
KDC	unusing KDC server

(b) Confirm that the power supply lamp of the node is turned off.

(c) Connect the private maintenance PC to a BMC port.
For more information, refer to "Set Up '1.4 Connection Confirmation of the Remote Console' (SETUP 01-0010)".

(d) Open the remote console window.
For more information, refer to "Set Up '1.5 Startup Confirmation of OS by using Remote Console' (SETUP 01-0010)".

(e) Confirm that the disk array subsystem is running when connect the disk array subsystem to the node.
If the OS is started when the disk array subsystem is not running, an FC path failure occurs.

Copyright © 2011, 2012, Hitachi, Ltd.

(f) Make sure that the power lamp turns on when pressing the power button.
For the location of the power button, refer to "A.2.1 Front side".

While starting up the OS, the OS startup process may be suspended as the LILO Boot Menu window as shown in Figure 2.1.1.2-1 is displayed in the console window.
In that case, press Enter key and restart the OS.
If the OS does not start even if the [Enter] key is pressed, press the [Ctrl] + [Alt] + [Delete] keys to restart the node. If the remote console is used, press the [L] key while pressing the [Alt] key to restart the node.

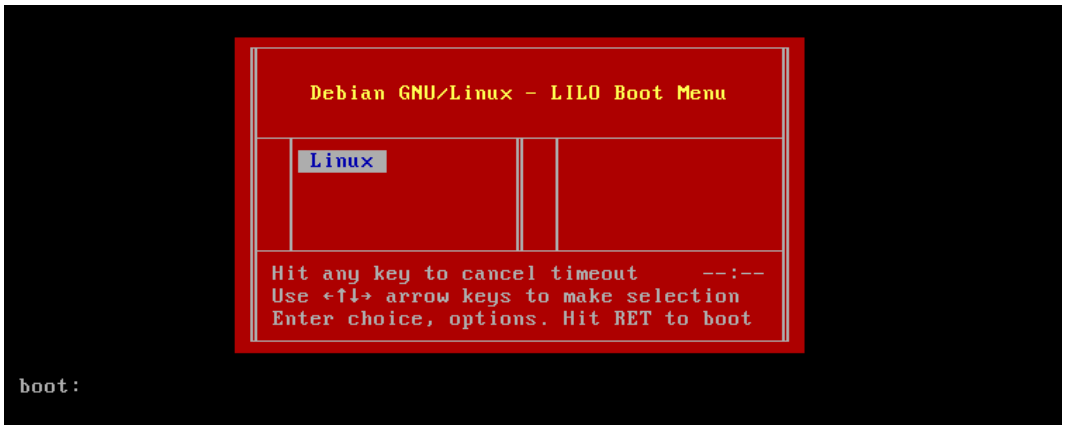

Figure 2.1.1.2-1 LILO Boot Menu Window

If the OS version is from 5.3.0-XX to 5.7.0-XX, otherwise, 6.0.0-XX or later, the progress of the OS startup is displayed. However if you press the [Alt] + [F3] keys, you can switch to the detailed information display of the OS startup. Also, you can switch to the progress display by pressing the [Ctrl] + [F1] keys.
When using the remote console and to switch the display, you need to use the [Alt] button in the tool bar located on the upper side of the console window instead of using the [Alt] key on the keyboard.

NOTE: A remote console has the restriction on the operation of the [Alt] key. If using the [Alt] key is indicated, take the following precautions.
- In the case of CR210HM/CR220SM, press the [Alt] + [Z] keys and operate other keys that require the [Alt] key while pressing the [Alt] key. After completing the operation, press the [Alt] + [Z] keys again to release the [Alt] key hold status.
- In the case of D51B-2U, refer to "QuantaGrid Series D51B-2U Technical Guide" to perform the key operations including the [Alt] key.

(g) Check the console window to confirm that the login prompt is displayed.

```
File Operating System (*1)

xxxxxxxx (device-serial-number) login:
```

*1: It is displayed as "Hitachi File Storage Linux" in the case the OS version is 3.0.1-XX or earlier.
It is not displayed in the case the OS version is 3.2.1-XX or later.

Figure 2.1.1.2-2 Login Prompt Window

(h) Log in to the OS and execute rgstatus command to check if the resource group is running normally.
For the confirmation methods, refer to "Maintenance Tool '2.63 Resource group Status Display (rgstatus)' (MNTT 02-3380)".

Copyright © 2011, 2016, Hitachi, Ltd.

2.1.2 Procedures for turning off the power

Turning off the power is the operation to make Power-Off status by terminating OS.

The following 3 descriptions indicate the positioning of the procedures for turning off the power.

- "2.1.2.1 OS termination of a node" shows how to terminate the OS of a normal node by using the CLI command (nasshutdown). Use this method usually.

- Installation "2.1.2.2 Terminating the OS of the node by operating the power button" (INST 02-0080) shows how to terminate the OS of a node by operating the power button when the maintenance LAN cannot be connected.
  However, use it only when instructed.

- Installation "2.1.2.3 Terminating the OS forcibly by using the power button" (INST 02-0090) shows how to terminate the OS of a node forcibly by operating the power button.
  However, use it only when instructed.

2.1.2.1 OS termination of a node

Execute (1) for the cluster node configuration, and execute (2) for the single node configuration.

(1) Cluster node configuration

NOTE:
- Do not terminate the OS of the node without permission from the system administrator.
- To terminate both OSs of the nodes, press the both power switches on the nodes at the same time. Refer to "A.2.1 Front side" for the places of the power switches.
- When you terminate one side node OS, perform failover and the node termination.
- After a failover is performed, all file-sharing services running on the node in the cluster will run on the destination node performed failover.
  At this time, a client connection might be lost temporarily. Acquire the permission from the system administrator.
  The temporary loss of the connection is included in the service specifications for the file-sharing service.
- A failover can be performed only when the status of both nodes in the cluster is "UP".
  After completed the failover, request the system administrator to execute the node termination. If the system administrator is absent, maintenance personnel should make contact with the system administrator and execute this operation with his/her permission. (*)

  *: For the details about the actual operation, refer to the procedure (c).

Copyright © 2011, 2012, Hitachi, Ltd.

(a) Connect the maintenance PC to maintenance port of the target node and log in. Refer to "Maintenance Tool '1.3 Procedures for Operating Commands' (MNTT 01-0200)" for the method of logging in.

(b) Refer to "Maintenance Tool '2.2 Displaying the Cluster Status (clstatus)' (MNTT 02-0040)" and check the node status.
- When the Node Status of the both nodes is "UP", go to step (c).
- When the Node Status of the node to be maintained is "INACTIVE", go to step (d).
- When the Node Status of the node to be maintained is "DOWN", go to step (d).
- When the Node Status of the both nodes is "UNKNOWN", wait for five minutes, and then perform the procedure from step (b) again. If the Node Status is not changed from "UNKNOWN" even performed again, contact the Technical Support Center.

(c) Request the system administrator to perform failover the resource group of the node to be maintained to the normal node and to set the "Node Status" of the node to be maintained to "INACTIVE".
If the system administrator is absent, maintenance personnel should make contact with the system administrator and execute this operation with his/her permission. For the procedure of this operation, refer to "Maintenance Tool '3.1 Failover and Node termination to execute the OS stop or the OS reboot' (MNTT 03-0000)".

(d) Terminate the OS of the node according to "Maintenance Tool '2.28 Terminating the OS of This Side Node (nasshutdown)' (MNTT 02-1740)".

(e) Confirm that the power supply lamp of the node is turned off.
It takes about one minute before the indicator goes out.
For the location of the power button, refer to "A.2.1 Front side".

(f) If the indicator does not go out, proceed to (3) to forcibly terminate the OS. Then start the node referring to Installation "2.1.1 Procedure for turning on the power" (INST 02-0000).
Connect the maintenance PC to maintenance port, and collect logs referring to "Maintenance Tool '2.19 Collecting Logs (oslogget)' (MNTT 02-1300)".

Copyright © 2011, 2015, Hitachi, Ltd.

(2) Single node configuration

NOTE: Do not execute OS termination of a node without permission of the system administrator.

(a) Connect the private maintenance PC to a BMC port. For more information, refer to "Set Up '1.4 Connection Confirmation of the Remote Console' (SETUP 01-0010)".

(b) Open the remote console window and make sure that the login prompt is displayed on the window. For more information, refer to "Set Up '1.5 Startup Confirmation of OS by using Remote Console' (SETUP 01-0010)".

(c) Login prompt might not be shown on the window if the system is starting or collecting a dump. In this case, wait about 10 minutes, and open the remote console window again.

(d) When the login prompt is displayed, log in to it and terminate the node OS. For the OS termination of a node, refer to "Maintenance Tool '2.28 Terminating the OS of This Side Node (nasshutdown)' (MNTT 02-1740)".

(e) Confirm that the power lamp is turned off. It takes about one minute to turn off the power indicator. For the location of the power button, refer to "A.2.1 Front side".

(f) If the power indicator does not turn off, go to step (3) and execute the forced OS termination, and then start the node by referring to Installation "2.1.1 Procedure for turning on the power" (INST 02-0000). Connect the maintenance PC to maintenance port, and collect a log by referring to "Maintenance Tool '2.19 Collecting Logs (oslogget)' (MNTT 02-1300)".

Copyright © 2011, 2014, Hitachi, Ltd.

2.1.2.2 Terminating the OS of the node by operating the power button

NOTE: Do not terminate the OS of the node without permission from the system administrator.

(a) Stop the OS of the node.
Press the power button of the node one time.
For the location of the power button, refer to "A.2.1 Front side".

(b) Confirm that the node power lamp of the node is unlit.
It requires about one minute before the indicator goes out.

(c) If the power lamp does not go out, proceed to Installation "2.1.2.3 Terminating the OS forcibly by using the power button" (INST 02-0090) to forcibly terminate the OS.
Then start the node according to Installation "2.1.1 Procedure for turning on the power" (INST 02-0000).
Connect the maintenance PC to maintenance port, and collect log data according to "Maintenance Tool '2.19 Collecting Logs (oslogget)' (MNTT 02-1300)".

Copyright © 2011, 2014, Hitachi, Ltd.

2.1.2.3 Terminating the OS forcibly by using the power button

NOTE:
- Use the power button to forcibly terminate the OS of the node only when the instruction of forced termination is given.
- Do not terminate the OS of the node without permission from the system administrator.

(a) Terminate the OS of the node.
Hold down the power button of the node for five seconds or more until the indicator goes out.
For the location of the power button, refer to “A.2.1 Front side”.

(b) Confirm that the power lamp of the node is turned off.

Copyright © 2011, 2012, Hitachi, Ltd.

2.1.3 Procedure for rebooting the OS

There are two ways to reboot an OS. Each of the ways is described in the following.

- "2.1.3.1 OS reboot of a node by command" shows the method of rebooting OS of a node by using CLI command (nasreboot).
- Installation "2.1.3.2 OS reboot of a node by NMI issue operation (single node configuration only)" (INST 02-0140) shows the method of rebooting the OS of a node with the NMI issue operation when it is single node configuration and the connection to the private maintenance port or to the BMC port is not available. Note that this operation must be done only when it is instructed.

2.1.3.1 OS reboot of a node by command

Execute (1) for the cluster configuration and (2) for the single node configuration.

(1) Cluster node configuration

NOTE:
- Do not reboot the OS of a node without permission from the system administrator.
- To reboot the OS of both nodes, reboot it on either node at a time.
- Perform failover and node termination if the one side of node OS is to be rebooted.
- After a failover is performed, all file-sharing services running on the node in the cluster runs on the destination node performed failover.
  At this time, a client connection might be lost temporarily. Acquire the permission from the system administrator.
  The temporary loss of the connection is included in the service specifications for the file-sharing service.
- A failover can be performed only when the status of both nodes in the cluster is "UP".
  After the failover is completed, request the system administrator to terminate the node.
  However, if the system administrator is absent, maintenance personnel should make contact with the system administrator and execute this operation with his/her permission. (*)

  *: For the details about the actual operation, refer to the procedure (c).

(a) Connect the maintenance PC to maintenance port of the target node and log in. For the login method, refer to "Maintenance Tool '1.3 Procedures for Operating Commands' (MNTT 01-0200)".

(b) Refer to "Maintenance Tool '2.2 Displaying the Cluster Status (clstatus)' (MNTT 02-0040)", and check the node status.
When the "Node Status" of the target node to be maintained is in the state of item 3 or 4 described in the "Maintenance Tool '2.2 Displaying the Cluster Status (clstatus) Table 2.2.2 Cluster status to be used for the confirmation when the maintenance is in progress'(MNTT 02-0051)", the rebooting OS is available. In this case, go to step (d). If the cluster status is other than the above, go to step (c) to perform failover and node termination.

Copyright © 2011, 2014, Hitachi, Ltd.

(c) Request the system administrator to perform failover the resource group of the node to be maintained to the normal node and to set the "Node Status" of the node to be maintained to "INACTIVE". After completed the operations of system administrator, check that the status becomes as shown in the Table 2.1.3.1-1. Note that if the system administrator is absent, maintenance personnel should make contact with the system administrator and execute this operation with his/her permission. For the procedure of this operation, refer to "Maintenance Tool '3.1 Failover and Node termination to execute the OS stop or the OS reboot' (MNTT 03-0000)".

Table 2.1.3.1-1 Confirmation of Failover and Stopping Node

Type of operation	Operation by system administrator	Confirmation operation by maintenance personnel (*1)
Failover of resource group	Migrates the resource group running in the maintenance target node to the normal node. For the details, refer to "General 'Reference Place in User's Guide for Operating Procedures Table 4 'Changing the execution node of a resource group'' (GENE 00-0040)".	Confirm the "Running node" of each of the resource groups is a normal node.
Node termination	Terminates the service of the maintenance target node. For the details, refer to "General 'Reference Place in User's Guide for Operating Procedures Table 4 'Stopping and starting a node'' (GENE 00-0040)".	Check if the "Node Status" of the target node to be maintained shows "INACTIVE".

*1: Refer to "Maintenance Tool '2.2 Displaying the Cluster Status (clstatus) Table 2.2.2 Cluster status to be used for the confirmation when the maintenance is in progress'(MNTT 02-0051)".

Copyright © 2011, 2012, Hitachi, Ltd.

NOTE: Open the console window of KVM / Remote console, and then perform the step (d) to perform restart confirmation.

(d) Reboot the OS of the node according to "Maintenance Tool '2.29 Rebooting the OS of This Side Node (nasreboot)' (MNTT 02-1790)".
Rebooting the OS requires about 15 minutes.

While starting up the OS, the OS startup process may be suspended as the LILO Boot Menu window as shown in Figure 2.1.3.1-1 is displayed in the console window.
In that case, press Enter key and restart the OS.
If the OS does not start even if the [Enter] key is pressed, press the [Ctrl] + [Alt] + [Delete] keys to restart the node. If the remote console is used, press the [L] key while pressing the [Alt] key to restart the node.

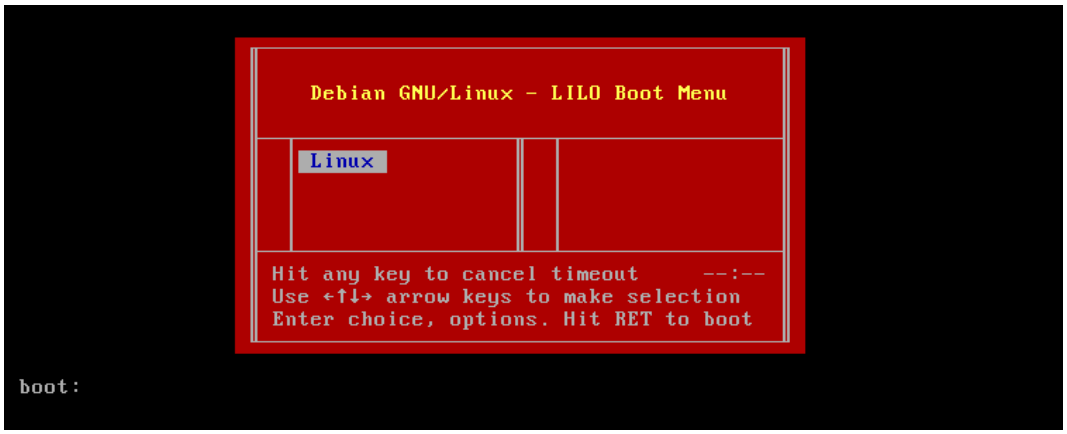

Figure 2.1.3.1-1 LILO Boot Menu Window

If the OS version is from 5.3.0-XX to 5.7.0-XX, otherwise, 6.0.0-XX or later, the progress of the OS startup is displayed. However if you press the [Alt] + [F3] keys, you can switch to the detailed information display of the OS startup. Also, you can switch to the progress display by pressing the [Ctrl] + [F1] keys.
When using the remote console and to switch the display, you need to use the [Alt] button in the tool bar located on the upper side of the console window instead of using the [Alt] key on the keyboard.

NOTE: A remote console has the restriction on the operation of the [Alt] key. If using the [Alt] key is indicated, take the following precautions.
- In the case of CR210HM, press the [Alt] + [Z] keys and operate other keys that require the [Alt] key while pressing the [Alt] key. After completing the operation, press the [Alt] + [Z] keys again to release the [Alt] key hold status.
- In the case of D51B-2U, refer to "QuantaGrid Series D51B-2U Technical Guide" to perform the key operations including the [Alt] key.

Check the console window, and confirm that the login prompt is displayed.

```
File Operating System (*1)

xxxxxxxx (device-serial-number) login:
```

*1: It is displayed as "Hitachi File Storage Linux" in the case the OS version is 3.0.1-XX or earlier.
It is not displayed in the case the OS version is 3.2.1-XX or later.

Figure 2.1.3.1-2 Login Prompt Window

Copyright © 2011, 2016, Hitachi, Ltd.

(e) Request the system administrator to set the “Node Status” of the restarted node to “UP” and perform failback the resource group, which has been performed failover, to the node that restarted.
For the reference place in User’s Guide describing the details about starting a node, refer to “General ‘Reference Place in User's Guide for Operating Procedures Table 4 ‘Stopping and starting a node’’ (GENE 00-0040)”, and for the reference place in User’s Guide describing the details about failover/failback of a resource group, refer to “General ‘Reference Place in User's Guide for Operating Procedures Table 4 ‘Changing the execution node of a resource group’’ (GENE 00-0040)”.
In the BMC direct connection configuration, you cannot start a node from GUI.
If the system administrator is absent, maintenance personnel should make contact with the system administrator and execute this operation with his/her permission. For the procedure of this operation, refer to “Maintenance Tool ‘3.2 Failback and Start of Node After Starting the OS’ (MNTT 03-0030)”.

(f) To check the failback, refer to “Maintenance Tool ‘2.2 Displaying the Cluster Status (clstatus)’ (MNTT 02-0040)”, and confirm the Running Node of the resource group.
If it cannot be confirmed, perform steps from (e) again.

Copyright © 2011, 2012, Hitachi, Ltd.

(2) Single node configuration

NOTE: Do not reboot the OS of a node without permission from the system administrator.

(a) Connect the private maintenance PC to a BMC port. For more information, refer to "Set Up '1.4 Connection Confirmation of the Remote Console' (SETUP 01-0010)".

(b) Open the remote console window and make sure that the login prompt is displayed on the window. For more information, refer to "Set Up '1.5 Startup Confirmation of OS by using Remote Console' (SETUP 01-0010)".

(c) Login prompt may not be shown on the window if the system is starting or collecting a dump. In this case, wait about 10 minutes, and open the remote console window again.

Copyright © 2011, 2015, Hitachi, Ltd.

(d) When the login prompt is displayed, log in to it and reboot the node OS.
For the OS reboot of a node, refer to "Maintenance Tool '2.29 Rebooting the OS of This Side Node (nasreboot)' (MNTT 02-1790)". It takes about 15minutes to reboot OS.

While starting up the OS, the OS startup process may be suspended as the LILO Boot Menu window as shown in Figure 2.1.3.1-3 is displayed in the console window.
In that case, press Enter key and restart the OS.
If the OS does not start even if the [Enter] key is pressed, press the [Ctrl] + [Alt] + [Delete] keys to restart the node. If the remote console is used, press the [L] key while pressing the [Alt] key to restart the node.

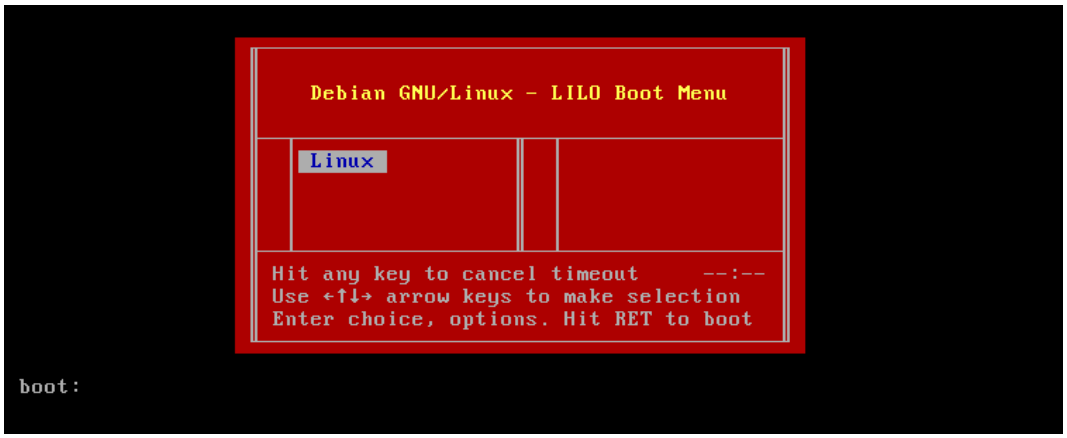

Figure 2.1.3.1-3 LILO Boot Menu Window

If the OS version is from 5.3.0-XX to 5.7.0-XX, otherwise, 6.0.0-XX or later, the progress of the OS startup is displayed. However if you press the [Alt] + [F3] keys, you can switch to the detailed information display of the OS startup. Also, you can switch to the progress display by pressing the [Ctrl] + [F1] keys.
When using the remote console and to switch the display, you need to use the [Alt] button in the tool bar located on the upper side of the console window instead of using the [Alt] key on the keyboard.

NOTE: A remote console has the restriction on the operation of the [Alt] key. If using the [Alt] key is indicated, take the following precautions.
- In the case of CR210HM/CR220SM, press the [Alt] + [Z] keys and operate other keys that require the [Alt] key while pressing the [Alt] key. After completing the operation, press the [Alt] + [Z] keys again to release the [Alt] key hold status.
- In the case of D51B-2U, refer to "QuantaGrid Series D51B-2U Technical Guide" to perform the key operations including the [Alt] key.

Check the console window, and confirm that the login prompt is displayed.

```
File Operating System (*1)

xxxxxxxx (device-serial-number) login:
```

*1: It is displayed as "Hitachi File Storage Linux" in the case the OS version is 3.0.1-XX or earlier.
It is not displayed in the case the OS version is 3.2.1-XX or later.

Figure 2.1.3.1-4 Login Prompt Window

(e) Log in to the OS, execute rgstatus command, and then confirm that the resource group is operated normally. Refer to "Maintenance Tool '2.63 Resource group Status Display (rgstatus)' (MNTT 02-3380)" for the method of the confirmation.

Copyright © 2015, 2016, Hitachi, Ltd.

2.1.3.2 OS reboot of a node by NMI issue operation (single node configuration only)

OS reboot is done by NMI issue operation after collecting dump.

NOTE: Do not execute node OS rebooting without permission of the system administrator.

(1) Connect the maintenance PC to a BMC port.
For more information, refer to "Set Up '1.4 Connection Confirmation of the Remote Console' (SETUP 01-0010)".

(2) Open the remote console window and confirm that the login prompt is displayed on the window.
For more information, refer to "Set Up '1.5 Startup Confirmation of OS by using Remote Console' (SETUP 01-0010)".

(3) Login prompt might not be shown on the window if the system is starting or collecting a dump.
In this case, wait about 10 minutes, and open the remote console window again.

(4) When the login prompt is displayed, execute NMI issue operation.
If the target model is other than the case of D51B-2U, go to step (4-1).
In the case of D51B-2U, go to step (4-2).

(4-1) The NMI issuing procedure for other than the case of D51B-2U is as follows.
- Press the NMI button. (Dell™PowerEdge™ R710)
- Press the BUZZER STOP button and SERVICE lamp switch at the same time. (HA8000 RS220xK)
- Press the FUNCTION switch and SERVICE lamp switch at the same time. (CR210HM and CR220SM)

It takes about 15minutes to reboot OS.
For the location of the button used for NMI issue operation, refer to "A.2.1 Front side".
When the issuing of NMI is completed, go to step (4-3).

Copyright © 2011, 2015, Hitachi, Ltd.

(4-2) The NMI issuing procedure for the case of D51B-2U is as follows.

(a) As shown in the following command format and Figure 2.1.3.2-1, execute the ipmiutil command on the command prompt window of the maintenance PC.

Command format : <*full-path-name-of-ipmiutil.exe*> reset -n -N <*IP-address-of-BMC-port*> -U <*user-ID-of-BMC*> -Y

Specify "admin" in user-ID-of-BMC.
When ipmiutil.exe is run, you are prompted to enter password. For the password of "admin", refer to 'Logging into MegaRAC GUI' in "QuantaGrid Series D51B-2U Technical Guide".

It takes about 15minutes to reboot OS.
When the issuing of NMI is completed, go to step (4-3).

```
C:\>D:\ipmiutil-2.4.2-win32\ipmiutil.exe reset -n -N 10.213.138.65 -U admin -P admin
ipmiutil ver 2.42
hwreset ver 2.42
Opening lan connection to node 10.213.138.65 ...
Connecting to node  10.213.138.65
-- BMC version 3.32, IPMI version 2.0
Power State      = 00   (S0: working)
hwreset: sending NMI ...
chassis_reset ok
hwreset: IPMI_Reset ok
hwreset, completed successfully
```

Figure 2.1.3.2-1 Execution Example of the ipmiutil Command

Copyright © 2011, 2015, Hitachi, Ltd.

(4-3) While starting up the OS, the OS startup process may be suspended as the LILO Boot Menu window as shown in Figure 2.1.3.2-2 is displayed in the console window.
In that case, press Enter key and restart the OS.
If the OS does not start even if the [Enter] key is pressed, press the [Ctrl] + [Alt] + [Delete] keys to restart the node. If the remote console is used, press the [L] key while pressing the [Alt] key to restart the node.

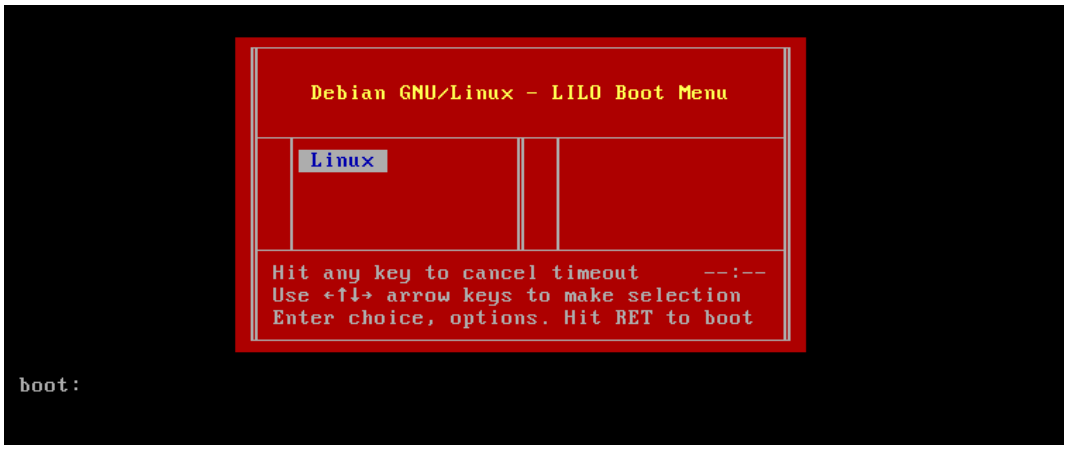

Figure 2.1.3.2-2 LILO Boot Menu Window

If the OS version is from 5.3.0-XX to 5.7.0-XX, otherwise, 6.0.0-XX or later, the progress of the OS startup is displayed. However if you press the [Alt] + [F3] keys, you can switch to the detailed information display of the OS startup. Also, you can switch to the progress display by pressing the [Ctrl] + [F1] keys.
When using the remote console and to switch the display, you need to use the [Alt] button in the tool bar located on the upper side of the console window instead of using the [Alt] key on the keyboard.

NOTE: A remote console has the restriction on the operation of the [Alt] key. If using the [Alt] key is indicated, take the following precautions.

- In the case of CR210HM/CR220SM, press the [Alt] + [Z] keys and operate other keys that require the [Alt] key while pressing the [Alt] key. After completing the operation, press the [Alt] + [Z] keys again to release the [Alt] key hold status.
- In the case of D51B-2U, refer to "QuantaGrid Series D51B-2U Technical Guide" to perform the key operations including the [Alt] key.

Check the console window, and confirm that the login prompt is displayed.

```
File Operating System (*1)

xxxxxxxx (device-serial-number) login:
```

*1: It is displayed as "Hitachi File Storage Linux" in the case the OS version is 3.0.1-XX or earlier.
It is not displayed in the case the OS version is 3.2.1-XX or later.

Figure 2.1.3.2-2 Login Prompt Window

(5) Log in to the OS, and execute rgstatus command to confirm that the resource group operates normally. Refer to "Maintenance Tool '2.63 Resource group Status Display (rgstatus)' (MNTT 02-3380)"for the confirmation method.

Copyright © 2011, 2016, Hitachi, Ltd.

This page is for editorial purpose only.

Copyright © 2011, Hitachi, Ltd.

Chapter 3 Setting the Tape Library

This chapter describes the procedure for connecting the tape library to HDI.

Note that the tape library is not supported for the configuration of HDI for Cloud and the single node.

3.1 About Tape Library Support Specifications

Table 3.1-1 shows the list of the tape library specifications supported by HDI.

Table 3.1-1 List of Tape Library Support Specifications

No.	Category	Item	Supported specification
1	Backup device	Tape library	StorageTek-made library (1) L500
2		Tape drive	Check the latest information of tape drive to be supported by FAR.
3	Connection configuration	Connection configuration	(1) The fabric connection is supported. (2) The configuration shown in Figure 3.2.1-1 is used. The nodes control only the tape drives. The transfer robot must be controlled by the backup server.
4	Software	OS	(1) OS version 2.2.1-XX or later
5		Backup server software	Check the latest information of backup server software to be supported by FAR.
6	Operation	Number of connections	(1) Registration of a maximum of 15 tape drives per node is supported.
7		File systems that can be backed up	(1) File systems in user LUs can be backed up. File systems on an OS disk and in the cluster management LU cannot be backed up.

NOTE: The data sheet of the Feature Availability Report (FAR) is described the supporting software and systems by HDI for the System Engineer (SE). Please ask the SE or the develop personnel when supported information is necessary. The FAR information doesn't need to progress the setup procedure in this chapter.

Copyright © 2011, 2012, Hitachi, Ltd.

3.2 Overview of the Tape Library Connection

HDI supports a connection with the tape library.

NOTE: The direct connection of HDI with the tape library is not supported. When connecting HDI to the tape library, be sure to connect them via a FC-SW.

By connecting the tape library, HDI provides functionality for backing up data for file systems to the tape library and restoring data from backed up file systems in the tape library.

The nodes control only the tape drives. The system administrator using the backup server must control the transfer robot.

Connecting the tape library requires the operations such as the installation, connection, and setting of the tape library and a backup server, installation and zoning of FC-SWs (FC switches), and setting and connection of FC ports of the nodes. All the maintenance personnel of Hitachi Data Ingestor have to only check the tape library after being connected.

For any other installation and setting operations, confirm the system administrator that all the necessary installation and setting operations have been completed.

“3.2.1 Tape library connection configuration diagram” describes the target of system administrator operations.

“3.2.2 Overview flow for connecting the tape library” describes the procedure for connecting the tape library, which must be performed by the maintenance personnel of Hitachi Data Ingestor.

Copyright © 2011, 2012, Hitachi, Ltd.

3.2.1 Tape library connection configuration diagram

Figure 3.2.1-1 shows an example of tape library connection configuration.

The device setting within the circled with the dotted line in Figure 3.2.1-1 is executed by the system administrator at the time of connecting the tape library. The FC cable connection between a node and a disk array subsystem is executed by maintenance personnel.
Zoning of the FC-SW is executed by the system administrator.

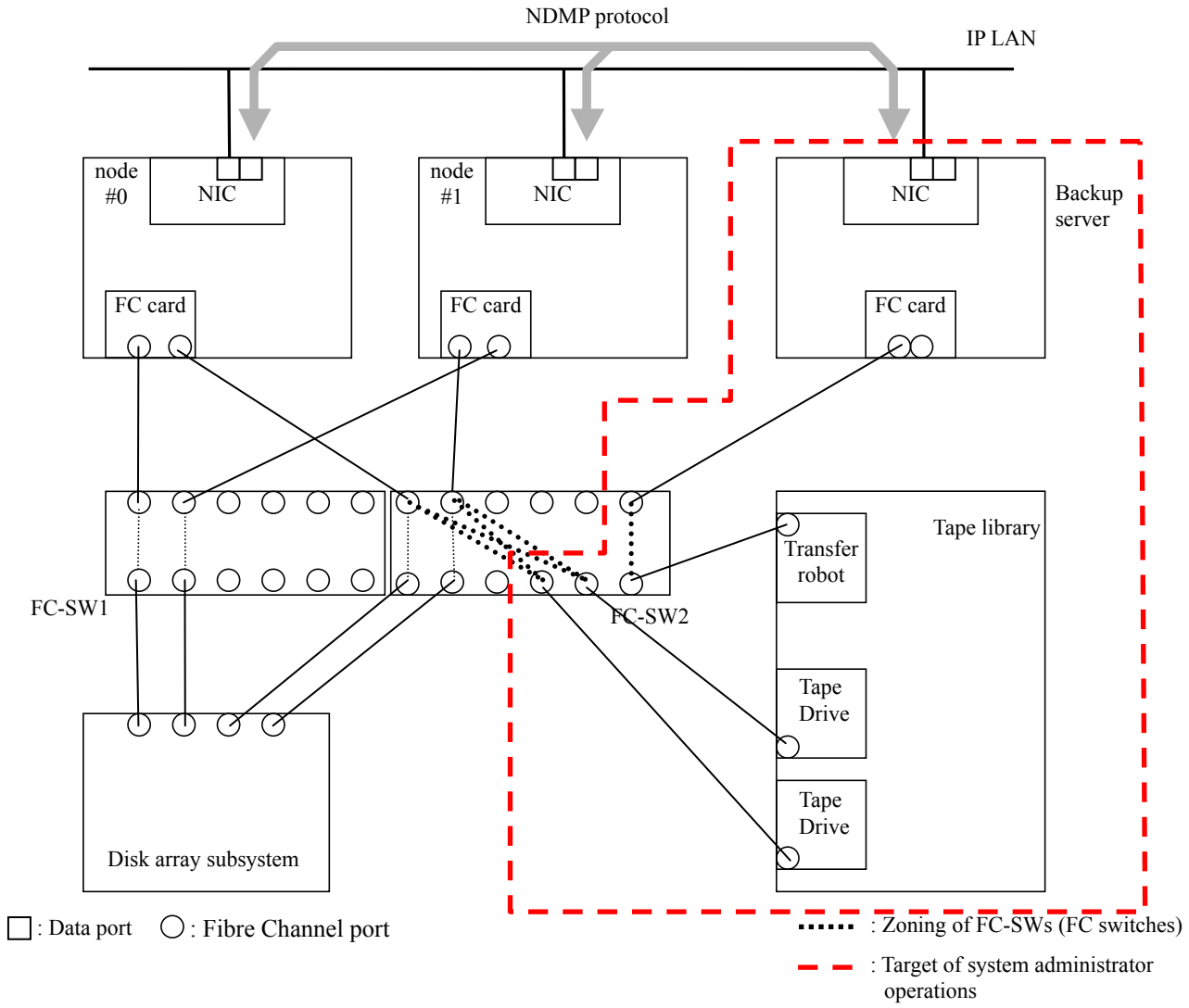

Figure 3.2.1-1 Tape library connection configuration diagram

Copyright © 2011, Hitachi, Ltd.

NOTE:
- To allow backup operation to be performed of both nodes in the cluster, one tape drive in the tape library must be shared. Although this operation must be performed by the system administrator, sharing a tape drive requires the “Shared Storage Option” license to be registered in the tape library.
- When connecting a Fibre Channel interface cable or optical Ethernet cable, bend the cable with a large bend radius (R) that is equal to or greater than 70 mm to prevent load on the cable and connector.
- For details about the physical positions corresponding to the FC port names of the node, refer to “A.2.2.2 Port arrangement and port names”.

Copyright © 2011, 2012, Hitachi, Ltd.

3.2.2 Procedure for connecting the tape library

Figure 3.2.2-1 shows the overview flow for connecting the tape library.

The maintenance personnel of Hitachi Data Ingestor must follow the flow to connect the tape library.

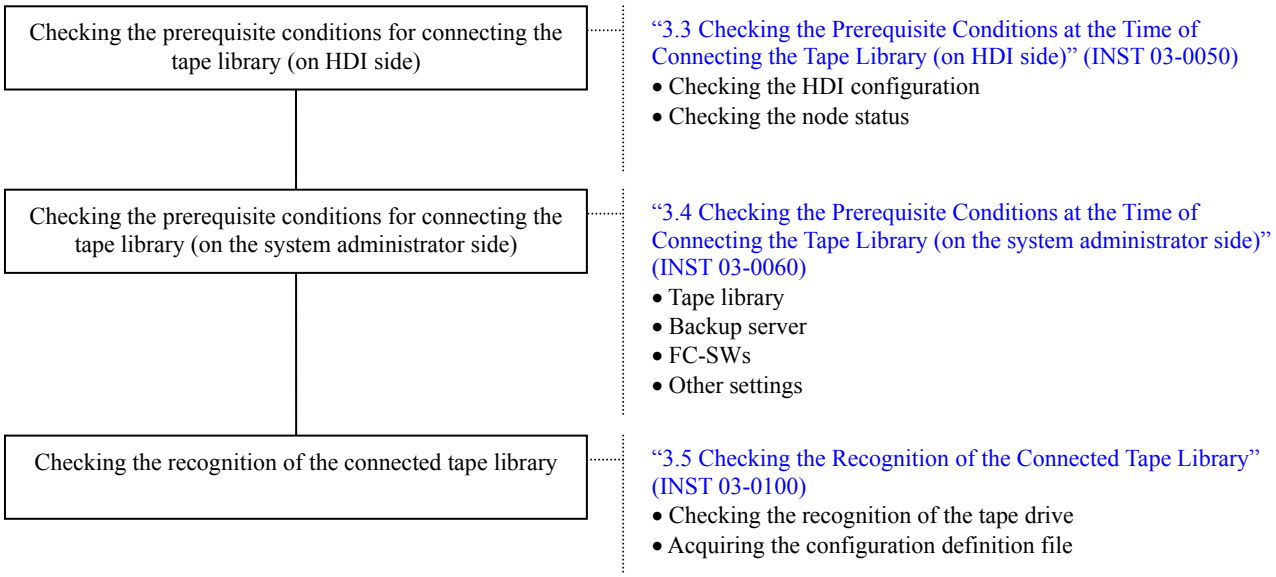

Figure 3.2.2-1 Overview flow for connecting tape library

Copyright © 2011, 2012, Hitachi, Ltd.

3.3 Checking the Prerequisite Conditions at the Time of Connecting the Tape Library (on HDI side)

When connecting the tape library, the maintenance personnel of Hitachi Data Ingestor must check the items described in “3.3.1 Checking the HDI configuration” and “3.3.2 Checking the node status”.

3.3.1 Checking the HDI configuration

(1) Confirm that the node of HDI and the disk array subsystem are connected via FC-SW, and the FC-SW has an unoccupied port that can be used for the tape library connection.

3.3.2 Checking the node status

(1) Check whether the nodes are started or not.
If any node is not started, turn it on as described in Installation “2.1.1 Procedure for turning on the power” (INST 02-0000).

Copyright © 2011, 2012, Hitachi, Ltd.

3.4 Checking the Prerequisite Conditions at the Time of Connecting the Tape Library (on the system administrator side)

In this section, the maintenance personnel of Hitachi Data Ingestor do not need to perform any settings during connection to the tape library.
All the maintenance personnel have to do is check the recognition of the tape library.

Before starting operation, the maintenance personnel of Hitachi Data Ingestor must request the system administrator to confirm that the operations described in “3.4.1 Tape library”, “3.4.2 Backup server”, “3.4.3 FC-SWs”, and “3.4.4 Checking the status of the tape library, backup server, and FC-SWs” have been completed.

3.4.1 Tape library

The system administrator is responsible for installing and setting up the tape library. Confirm the following with the system administrator.

(1) Tape library installation

(a) Confirm that the tape library is installed.

(b) Check the cabling (power supply and FC cable connection to the tape library).
FC cables must be connected to the FC ports of the tape library.

(2) Settings
Check the connection settings for the transfer robot control port, connection with the backup server, and the FC connection settings.

(a) Fabric settings of the transfer robot for the FC port (Port A)
- Confirm that the ALPA (Arbitrated Loop Physical Address) is disabled.
- Confirm that Address is set to Auto (This is because a port ID is assigned by the FC-SW).

(b) Fabric settings of the tape drive for the FC port (Port A)
- Confirm that the ALPA (Arbitrated Loop Physical Address) is disabled.
- Confirm that Address is set to Auto (This is because a port ID is assigned by the FC-SW).

Supplementary note: A node and the tape drive are connected by using a point to point connection via an FC-SW.

Copyright © 2011, Hitachi, Ltd.

3.4.2 Backup server

The system administrator is responsible for installing and setting the backup server. Confirm the following with the system administrator.

(1) Backup server installation

(a) Confirm that the backup server is installed.

(b) Confirm the cabling (power supply and FC cable connection to the backup server).
An FC cable must be connected to the FC port on the backup server.

(2) Settings
Confirm that the backup management software is installed.

Supplementary note:
The backup server uses the NDMP library to send a backup or restore instruction to a node.
The node uses the NDMP library incorporated in the OS to receive the instruction, and performs the backup or restore operation.

Copyright © 2011, Hitachi, Ltd.

3.4.3 FC-SWs

The system administrator is responsible for installing and setting the FC-SWs. Confirm the following with the system administrator.

(1) FC-SW installation

Confirm the cabling (FC cable connection between the transfer robot and tape drives of the tape library and the FC-SWs)
The FC cables connected to the transfer robot and tape drives of the tape library and the FC cable connected to the backup server must be connected to the FC-SW ports that have the settings described in item (2).

(2) Settings

(a) Confirm that zoning settings are specified for the FC-SW ports to which the backup server and the transfer robot of the tape library are to be connected.

(b) Confirm that zoning settings are specified for the FC-SW ports to which the nodes and tape drives are to be connected.
(Refer to the configuration diagram of the tape library in Figure 3.2.1-1. However, Figure 3.2.1-1 is a configuration example when there are two tape drives. Zoning must be specified so that all ports connected to the nodes can be connected to all tape drives.)

(c) Confirm that “Auto” is set for the speed of the following ports to be connected to the tape library.
- FC-SW port to which a node is connected
- FC-SW port to which the backup server is connected
- FC-SW port to which the transfer robot and tape drives of the tape library are connected

Copyright © 2011, Hitachi, Ltd.

3.4.4 Checking the status of the tape library, backup server, and FC-SWs

Confirm the following with the system administrator.

- The tape library, backup server, and FC-SWs are turned on and started.
- Tape operation has not been performed yet.

Copyright © 2011, Hitachi, Ltd.

3.5 Checking the Recognition of the Connected Tape Library

3.5.1 Checking the recognition of the tape drive

Check whether the tape drive is recognized or not.

(1) Refer to "Maintenance Tool '2.37 Displaying the Information of Tape Devices (tapelist)' (MNTT 02-2170)" to check whether the connected tape drive is recognized.
If it is not recognized, perform operation again as described in Installation "3.3 Checking the Prerequisite Conditions at the Time of Connecting the Tape Library (on HDI side)" (INST 03-0050).

(2) Check whether the tape drive is recognized on the other side node in the cluster.

(3) When the OS version is earlier than 3.0.0-XX, the operation of the maintenance personnel comes to an end. Request the system administrator to confirm the behavior of tape drive with the read/write procedure after completing the connection.
When the OS version is 3.0.0-XX and later, confirm the behavior of tape drive connected by the tapetest command with the read/write procedure. For the details about the method to confirm the tape drive behavior, refer to "Maintenance Tool '2.71 Operation Confirmation of the Tape Device is Performed (tapetest)' (MNTT 02-3750)". For the OS version confirmation, refer to "Maintenance Tool '2.34 Displaying the Version of the OS (versionlist)' (MNTT 02-2060)".

3.5.2 Acquiring a system setting information file

Because the HDI configuration has been changed, request the system administrator to acquire a backup of the OS disk and cluster management LU and download and save the backup file.

For the reference place in User's Guide describing the details about how to back up the OS disk and cluster management LU, refer to "General 'Reference Place in User's Guide for Operating Procedures Table 4 'Performing a backup of OS Disk/cluster management LU'' (GENE 00-0050)".

Copyright © 2011, 2012, Hitachi, Ltd.

This page is for editorial purpose only.

Copyright © 2011, Hitachi, Ltd.

Chapter 4 Overview of VLAN Setting Procedure for the Management LAN IP-SW

This chapter describes the procedure to set the management LAN IP-SW from the maintenance PC when replacing the management LAN IP-SW. Also, this chapter is the description to configure Dell Power Connect 2824. Chapter 4.3 describes an outline of procedures to construct the FastIron Ethernet Switch. For detailed procedures, refer to manuals of the target products.

NOTE: IP-SW is not used for the single node configuration.

For more detailed information, refer to “Dell™ Power Connect™ 28xx Systems User Guide” provided by the hardware vendor. The procedure described in this maintenance manual assumes that “Dell™ Power Connect™ 28xx Systems User Guide (Rev. A00)” is used for reference.

If there are different procedures in detail, refer to the latest revision of the procedure.

Copyright © 2010, 2016, Hitachi, Ltd.

4.1 Overview of VLAN Setting Diagram

The following diagram (Figure 4.1-1) shows an overview of VLAN setting for the management LAN IP-SW.

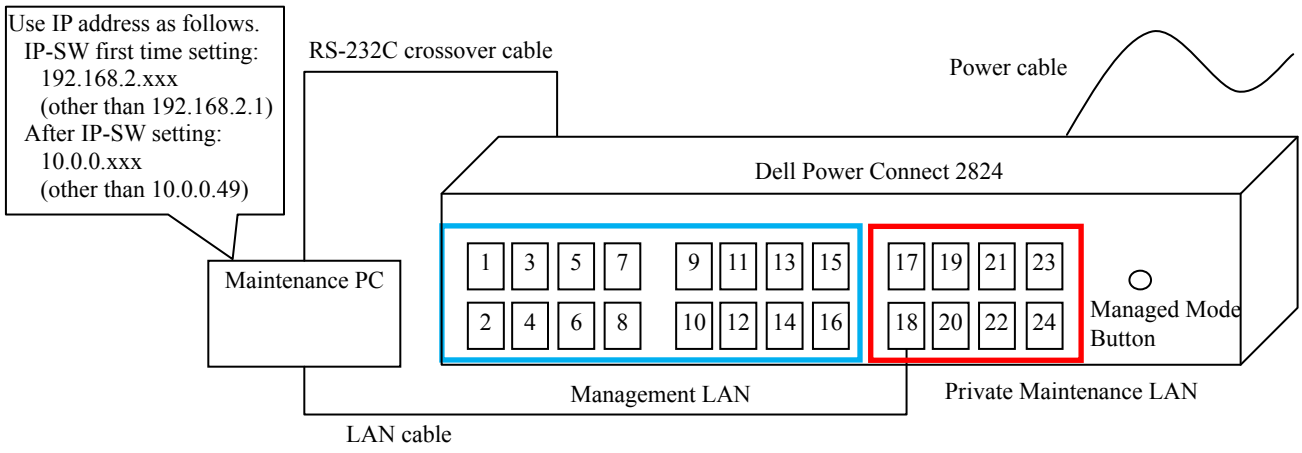

Figure 4.1-1 Overview of VLAN setting diagram

4.2 Overview of VLAN Setting Procedure (Dell Power Connect 2824)

The following shows the overview of the VLAN setting procedure for the management LAN IP-SW.

(1) Connect the power cable, LAN cable, and RS-232C crossover cable.
Make sure that you connect the LAN cable to any of ports 17 to 24.
For details about how to connect the power cable and RS-232C crossover cable, refer to “Hardware Description” in “Dell™ Power Connect™ 28xx Systems User Guide”.

Copyright © 2014, Hitachi, Ltd.

(2) Connect the RS-232C crossover cable to the maintenance PC, and then start the terminal software on the maintenance PC.

To use PuTTY, open PuTTY Configuration window (Figure 4.2-1) and set the value shown in Table 4.2-1.

For details, refer to “Connecting the Terminal to the Device” in “Dell™ Power Connect™ 28xx Systems User Guide” provided by the hardware vendor.

Table 4.2-1 Contents to be set

Setting items	Value to be set
Speed (baud)	9600
Data bits	8
Stop bits	1
Parity	None
Flow control	None

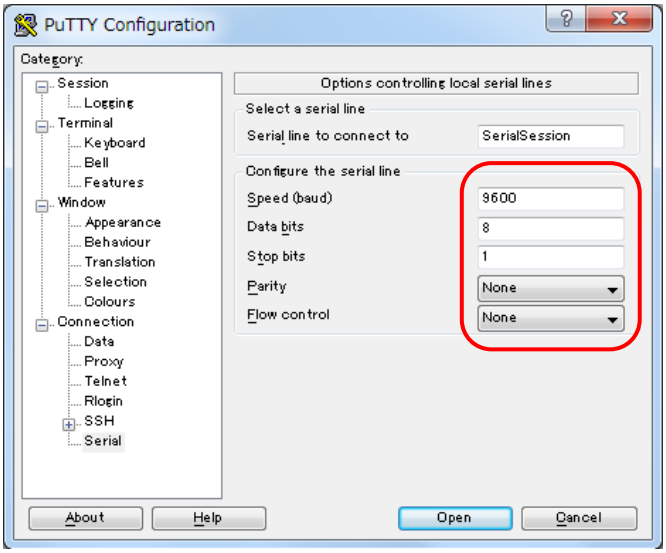

Figure 4.2-1 PuTTY Configuration window

(3) Switch from Unmanaged Mode to Managed Mode.

For more detailed information, refer to “Management Modes” in “Dell™ Power Connect™ 28xx Systems User Guide” provided by the hardware vendor.
If “Dell Easy Setup Wizard” is displayed on the PuTTY after changing mode to “Managed Mode”, go to step (5).

Copyright © 2010, 2014, Hitachi, Ltd.

(4) After changing “Managed Mode”, Start Web browser and access toward to IP-SW.
For the IP address of the maintenance PC, set an IP address in the same segment so that you can connect the maintenance PC to the IP-SW.
Input IP address of IP-SW (default, 192.168.2.1) into the address bar of the web browser.
(e.g.) http://192.168.2.1

Input the default user name and default password into the appeared Log In window.
Figure 4.2-2 Restore Saved Configuration Window is appeared on browser.
Click “Apply Changes” button after confirming “Restore Saved Configuration” check box is unchecked.

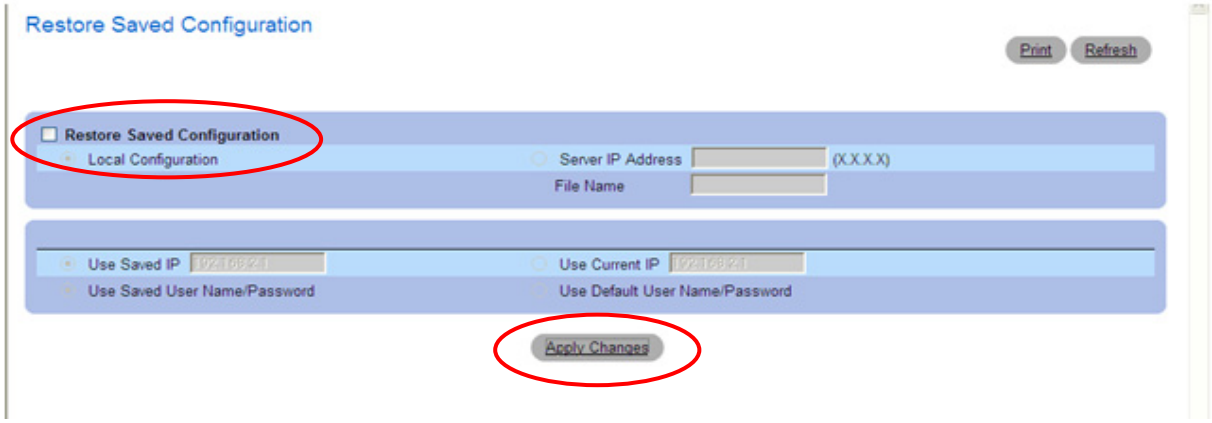

Figure 4.2-2 Restore saved Configuration Window

(5) In the “Dell Easy Setup Wizard” window appeared in the PuTTY, enter the user name, password, IP address, and subnet mask.
The input box of the SNMP and Default Gateway will be displayed, but do not enter them.
Enter “10.0.0.49” as the IP address, and “255.255.255.0” as the subnet mask.
Also specify the default user name and password.
For more detailed information, refer to “Starting and Configuring the Device” in “Dell™ Power Connect™ 28xx Systems User Guide” provided by the hardware vendor.

(6) Start Web browser again and access toward to IP-SW. For the IP address of the maintenance PC, set an IP address in the same segment so that you can connect the maintenance PC to the IP-SW. Input IP address applied in step (5) to the address bar.
Dell OpenManage Switch Administrator will be started, so enter the user name and password applied in step (5) to the Log In window.
For more detailed information, refer to “Using Dell OpenManage Switch Administrator” in “Dell™ Power Connect™ 28xx Systems User Guide” provided by the hardware vendor.

(7) Use Dell OpenManage Switch Administrator to perform the VLAN settings
As in the VLAN setting diagram (Figure 4.1-1), perform two untagged VLAN settings: Management LAN (port 1 to 16) and Private Maintenance LAN (port 17 to 24).
For the setting contents of the VLAN ID and network address, refer to Table 4.2-2.
For the window example of VLAN setting, refer to Figure 4.2-3.
For more detailed information, refer to “Configuring VLANs” in “Dell™ Power Connect™ 28xx Systems User Guide” provided by the hardware vendor.

Table 4.2-2 VLAN setting contents

	VLAN ID	Network address	Subnet mask
Management LAN	10	192.168.0.0	255.255.255.0
Private Maintenance LAN	20	10.0.0.0	255.255.255.0

Copyright © 2010, 2014, Hitachi, Ltd.

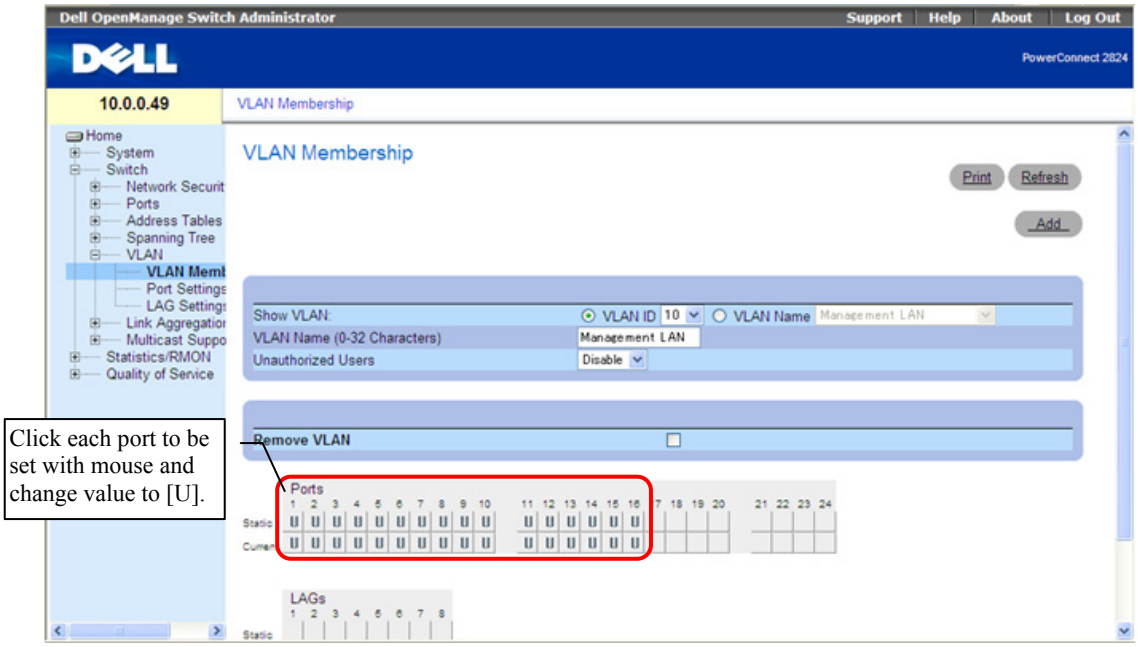

Figure 4.2-3 VLAN Membership Window

(8) Switch from Managed Mode to Secure Mode.
For more detailed information, refer to “Entering Secure Mode” in “Dell™ Power Connect™ 28xx Systems User Guide” provided by the hardware vendor.

(9) Remove the maintenance PC.

(10) VLAN setting has been completed. Continue setup or replacement of components.

NOTE: The setting of management LAN IP-SW cannot be changed in the Secure Mode.
If the setting is required to be changed, change the mode to Managed Mode and proceed from the step (4).
To change the mode from Secure Mode to Managed Mode, refer to “Dell™ Power Connect™ 28xx Systems User Guide ‘Management Modes’” provided by the hardware vendor.

Copyright © 2010, 2012, Hitachi, Ltd.

4.3 Overview of VLAN Setting Procedure (FastIron Ethernet Switch)

The following procedure is an outline to construct the FastIron Ethernet Switch. For detailed procedures, refer to IP-SW manuals of target products provided by hardware vendors.

Configure the exchanged IP-SW in accordance with the chart below.

Table 4.3-1 summary to configure IP-SW (FastIron Ethernet Switch)

#	Procedure
1	Connect the power cable, LAN cable, and serial cable with the switch.
2	Connect the Maintenance PC with the switch and modify the terminal setting on the Maintenance PC to fit the switch.
3	Log in to the switch from the serial port.
4	Set the administrator password.
5	Configure the IP address of the switch. (10.0.0.49/24 (IP address: 10.0.0.49, Netmask: 255.255.255.0))
6	Create the VLAN. (create vlan 10 ranged from port #1 to port #16, and create vlan 20 ranged from port #17 to port #24)
7	The setting of VLANs is confirmed.
8	Save the setting.
9	Reboot the IP-SW.
10	Check the settings after rebooting is completed (a few minutes).

Copyright © 2014, 2016, Hitachi, Ltd.