Hitachi Dynamic Link Manager (for VMware®)

8.7.6

User Guide

This document describes how to use the Hitachi Dynamic Link Manager for VMware. The document is intended for storage administrators who use Hitachi Dynamic Link Manager to operate and manage storage systems. Administrators should have knowledge of VMware vSphere and its management functionality, storage system management functionality.

MK-92DLM130-27

February 2021

Contents

Preface

This document describes how to use the Hitachi Dynamic Link Manager.

Intended audience

This document is intended for storage administrators who use Hitachi Dynamic Link Manager (HDLM) to operate and manage storage systems, and assumes that readers have:

- Knowledge of VMware vSphere and its management functionality
- Knowledge of Storage system management functionality

Product version

This document revision applies to HDLM for VMware v8.7.6 or later.

Release notes

Read the release notes before installing and using this product. They may contain requirements or restrictions that are not fully described in this document or updates or corrections to this document. Release notes are available on Hitachi Vantara Support Connect: https://knowledge.hitachivantara.com/Documents.

Document organization

The following table provides an overview of the contents and organization of this document. Click the chapter title in the left column to go to that chapter. The first page of each chapter provides links to the sections in that chapter.

Chapter/Appendix	Description
Chapter 1, Overview of HDLM on page 1-1	Gives an overview of HDLM, and describes its features.
Chapter 2, HDLM functions on page 2-1	Describes management targets and the system configuration of HDLM, and the basic terms and functions for HDLM.
Chapter 3, Creating an HDLM environment on page 3-1	Describes the procedures for building an HDLM environment (including installing and setting up HDLM), and describes for canceling the settings.
Chapter 4, HDLM operation on page 4-1	Describes how to use HDLM by using both the HDLM commands, and how to manually start and stop the HDLM manager.
Chapter 5, Troubleshooting on page 5-1	Explains how to troubleshoot a path error, HDLM failure, or any other problems that you might encounter.
Chapter 6, Command reference on page 6-1	Describes all the HDLM commands.
Chapter 7, Utility reference on page 7-1	Describes the HDLM utilities.

Chapter/Appendix	Description
Chapter 8, Messages on page 8-1	Provides information for all the possible messages that could be output by HDLM. It also lists and explains the HDLM messages and shows the actions to be taken in response to each message.

Related documents

The following Hitachi referenced documents are also available for download from the Hitachi Vantara Support Connect: https://knowledge.hitachivantara.com/Documents.

- *Hitachi Global Link Manager User Guide*, MK-92HC214
- *Hitachi Global Link Manager Installation and Configuration Guide*, MK-95HC107
- *Hitachi Global Link Manager Messages*, MK-95HC108

Document conventions

This document uses the following typographic conventions:

Convention	Description
Bold	• Indicates text in a window, including window titles, menus, menu options, buttons, fields, and labels. Example: Click **OK**. • Indicates a emphasized words in list items.
Italic	• Indicates a document title or emphasized words in text. • Indicates a variable, which is a placeholder for actual text provided by the user or for output by the system. Example: `pairdisplay -g` *`group`* (For exceptions to this convention for variables, see the entry for angle brackets.)
`Monospace`	Indicates text that is displayed on screen or entered by the user. Example: `pairdisplay -g oradb`
< > angled brackets	Indicates a variable in the following scenarios: • Variables are not clearly separated from the surrounding text or from other variables. Example: `Status-`*`<report-name><file-version>`*`.csv` • Variables in headings.
[ ] square brackets	Indicates optional values. Example: [a | b] indicates that you can choose a, b, or nothing.
{ } braces	Indicates required or expected values. Example: { a | b } indicates that you must choose either a or b.

Convention	Description
| vertical bar	Indicates that you have a choice between two or more options or arguments. Examples: [a | b] indicates that you can choose a, b, or nothing. { a | b } indicates that you must choose either a or b.
underline	Indicates the default value. Example: [a | b]
PROMPT>	Indicates the prompt in the window where the command is executed. *PROMPT* indicates the current directory path displayed in the window.

Conventions for storage capacity values

Physical storage capacity values (for example, disk drive capacity) are calculated based on the following values:

Physical capacity unit	Value
1 kilobyte (KB)	1,000 (10^3) bytes
1 megabyte (MB)	1,000 KB or $1{,}000^2$ bytes
1 gigabyte (GB)	1,000 MB or $1{,}000^3$ bytes
1 terabyte (TB)	1,000 GB or $1{,}000^4$ bytes
1 petabyte (PB)	1,000 TB or $1{,}000^5$ bytes
1 exabyte (EB)	1,000 PB or $1{,}000^6$ bytes

Logical capacity values (for example, logical device capacity, cache memory capacity) are calculated based on the following values:

Logical capacity unit	Value
1 block	512 bytes
1 cylinder	Mainframe: 870 KB Open-systems: • OPEN-V: 960 KB • Others: 720 KB
1 KB	1,024 (2^{10}) bytes
1 MB	1,024 KB or $1{,}024^2$ bytes
1 GB	1,024 MB or $1{,}024^3$ bytes
1 TB	1,024 GB or $1{,}024^4$ bytes
1 PB	1,024 TB or $1{,}024^5$ bytes

Logical capacity unit	Value
1 EB	1,024 PB or $1,024^6$ bytes

Accessing product documentation

Product documentation is available on Hitachi Vantara Support Connect: https://knowledge.hitachivantara.com/Documents. Check this site for the most current documentation, including important updates that may have been made after the release of the product.

Getting help

Hitachi Vantara Support Connect is the destination for technical support of products and solutions sold by Hitachi Vantara. To contact technical support, log on to Hitachi Vantara Support Connect for contact information: https://support.hitachivantara.com/en_us/contact-us.html.

Hitachi Vantara Community is a global online community for Hitachi Vantara customers, partners, independent software vendors, employees, and prospects. It is the destination to get answers, discover insights, and make connections. **Join the conversation today!** Go to community.hitachivantara.com, register, and complete your profile.

Comments

Please send us your comments on this document: doc.comments@hitachivantara.com. Include the document title and number, including the revision level (for example, -07), and refer to specific sections and paragraphs whenever possible. All comments become the property of Hitachi Vantara LLC.

Thank you!

1

Overview of HDLM

HDLM is a software package that manages paths between a host and a storage system. HDLM is designed to distribute loads across multiple paths and will switch a given load to another path if there is a failure in the path that is currently being used, thus improving system reliability.

This chapter gives an overview of HDLM and describes its features.

What is HDLM?

With the widespread use of data warehousing and increasing use of multimedia data, the need for high-speed processing of large volumes of data on networks has rapidly grown. To satisfy this need, networks dedicated to the transfer of data, such as SANs, are now being used to provide access to storage systems.

HDLM manages the access paths to these storage systems. HDLM provides the ability to distribute loads across multiple paths and switch to another path if there is a failure in the path that is currently being used, thus improving system availability and reliability.

The figure below shows the connections between hosts and storage systems.

An ESXi server that connects to a storage system via a SAN is called a host. A machine that connects to a host via a LAN and uses commands and utilities to control it is called a remote management client.

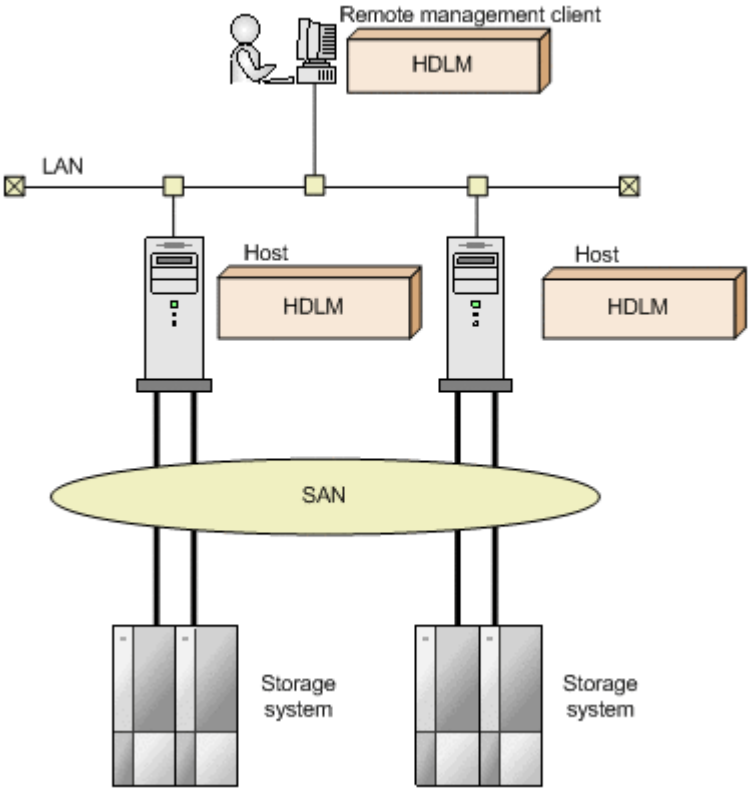

Figure 1-1 Connections between hosts and storage systems

For details about the storage systems supported by HDLM, see *Storage systems supported by HDLM on page 3-4*.

HDLM features

HDLM features include the following:

The ability to distribute a load across multiple paths. This is also known as *load balancing*.

When a host is connected to a storage system via multiple paths, HDLM can distribute the load across all the paths. This prevents one, loaded down path from affecting the processing speed of the entire system.

For details on load balancing, see *Distributing a load using load balancing on page 2-9*.

The ability to continue running operations between a host and storage system, even if there is a failure. This is also known as performing a *failover*.

When a host is connected to a storage system via multiple paths, HDLM can automatically switch to another path if there is some sort of failure in the path that is currently being used. This allows operations to continue between a host and a storage system.

For details on performing failovers, see *Performing failovers and failbacks using path switching on page 2-13*.

The ability to bring a path that has recovered from an error back online. This is also known as performing a *failback*.

If a path is recovered from an error, HDLM can bring that path back online. This enables the maximum possible number of paths to always be available and online, which in turn enables HDLM to better distribute the load across multiple paths.

Failbacks can be performed manually or automatically. In an automatic failback, HDLM automatically brings a path back online on the host side when the user has fixed the physical fault in the path.

For details on performing failbacks, see *Performing failovers and failbacks using path switching on page 2-13*.

The ability to automatically check the status of any given path at regular intervals. This is also known as *path health checking*.#

Detects path errors by checking the path status at regular intervals. This allows you to check for any existing path errors and to resolve them promptly and efficiently.

For details on setting up and performing path health checking, see *Detecting errors by using path health checking on page 2-22*.

#

This is implemented by functionality provided by VMware vSphere ESXi.

2

HDLM functions

This chapter describes the various functions that are built into HDLM. Before the function specifications are explained though, this chapter will go into detail about the HDLM management targets, system configuration, and basic terms that are necessary to know to effectively operate HDLM. After that, the rest of the chapter focuses on describing all the HDLM functions, including the main ones: load distribution across paths and path switching.

Devices managed by HDLM

Below is a list of devices that can or cannot be managed by HDLM. The devices that can be managed by HDLM are called *HDLM management-target devices*.

HDLM management-target devices:

The following devices are from the storage systems listed in Section *What is HDLM? on page 1-2*:

- SCSI devices
- Hitachi storage system command devices, such as Hitachi RAID Manager command devices

Non-HDLM management-target devices:

- SCSI devices other than those that are in the storage systems listed in Section *What is HDLM? on page 1-2*
- Built-in disks on a host
- Non-disk devices (tape devices, etc.)

System configuration

HDLM manages routes between a host and a storage system by using the SCSI driver. A host and a storage system are connected via an FC-SAN or an IP-SAN.

System configuration using an FC-SAN

In an FC-SAN, fiber cables connect hosts to storage systems. The cable port on the host is called a *host bus adapter* (HBA). The cable port on the storage system is called a *port* (P) on a *channel adapter* (CHA).

A *logical unit* (LU), which lies in a storage system, is either an input target or an output target to or from a host. The areas within an LU are called *Dev*s.

A route that connects a host to a Dev in an LU is called a *path*.

HDLM assigns a unique ID to each management-target path. This ID is called *AutoPATH_ID*. Sometimes, the path is also just simply called a *management target*.

The following figure shows the configuration of an HDLM system using an FC-SAN.

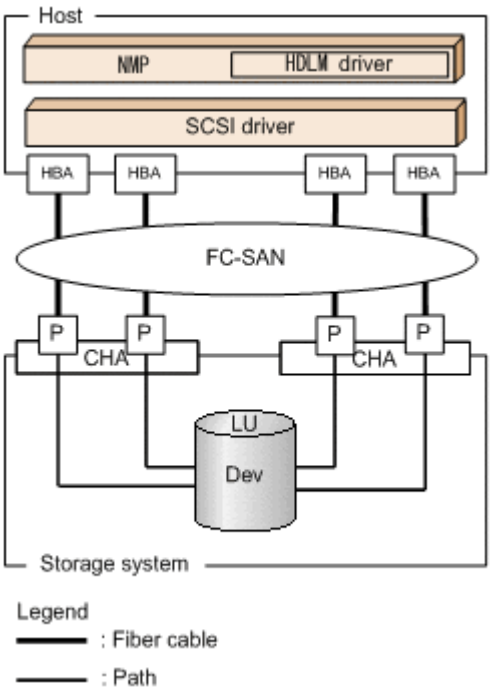

Figure 2-1 Configuration of an HDLM system when using an FC-SAN

The following table lists the HDLM system components when using an FC-SAN.

Table 2-1 HDLM system components when using an FC-SAN

Components	Description
HBA	A host bus adapter. This serves as a cable port on the host.
FC-SAN	A dedicated network that is used for the transfer of data between hosts and storage systems
CHA	A channel adapter
P	A port on a CHA. This serves as a cable port on a storage system.
LU	A logical unit with which a host can perform I/O operations. This unit can be accessed from the network.
Dev	A logical area (a partition) in an LU
Path	A route that connects a host to a Dev in an LU

System configuration using an IP-SAN

In an IP-SAN, LAN cables are used to connect hosts to storage systems. The cable port on the host is called an *iSCSI host bus adapter* (iSCSI HBA) or a *network interface card* (NIC). In order to use an NIC, the *iSCSI software* must be installed ahead of time on the host. The cable port on the storage

system is called a *port* (P) on a *channel adapter* (CHA) used for iSCSI connections.

A *logical unit* (LU), which lies in a storage system, is either an input target or an output target to or from a host. The areas within an LU are called *Dev*s.

A route that connects a host to a Dev in an LU is called a *path*.

HDLM assigns a unique ID to each management-target path. This ID is called *AutoPATH_ID*. Sometimes, the path is also just simply called a *management target*.

The following table lists the HDLM system components when using an IP-SAN.

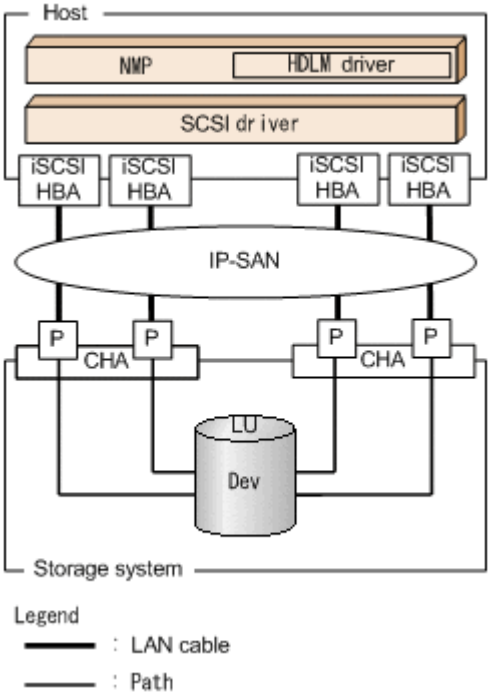

Figure 2-2 Configuration of an IP-SAN system when using an iSCSI HBA

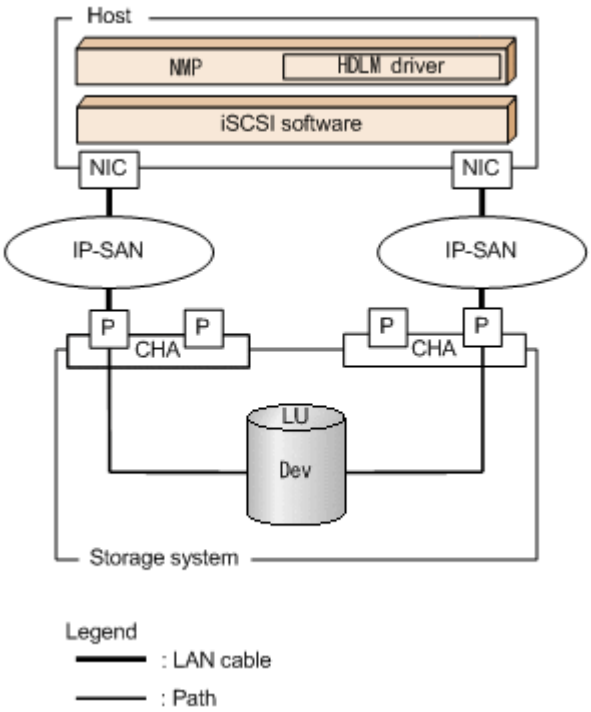

Figure 2-3 Configuration of an IP-SAN system when using iSCSI software and an NIC

Table 2-2 HDLM system components when using an IP-SAN on page 2-5 lists the HDLM system components when using an IP-SAN.

Table 2-2 HDLM system components when using an IP-SAN

Components	Description
iSCSI software	The driver software that contains the iSCSI initiator function
iSCSI HBA	A host bus adapter that contains the iSCSI initiator function. This serves as a cable port on a host. The *iSCSI HBA* is referred to as the *HBA* in HDLM commands. Sometimes, it is also just simply called an *HBA* in this manual.
NIC	A network interface card that serves as a cable port on a host. The *NIC* is referred to as the *HBA* in HDLM commands. Sometimes, it is also just simply called an *HBA* in this manual.
IP-SAN	A data transfer network that connects hosts and storage systems by using the iSCSI standard.
CHA	A channel adapter used for iSCSI connections
P	A port on a CHA. This serves as a cable port on a storage system.
LU	A logical unit with which the host can perform I/O operations. This unit can be accessed from the network.
Dev	A logical area (a partition) in an LU
Path	A route that connects a host to a Dev in an LU

LU configuration

The following figure shows the LU configuration recognized by the host, after the installation of HDLM.

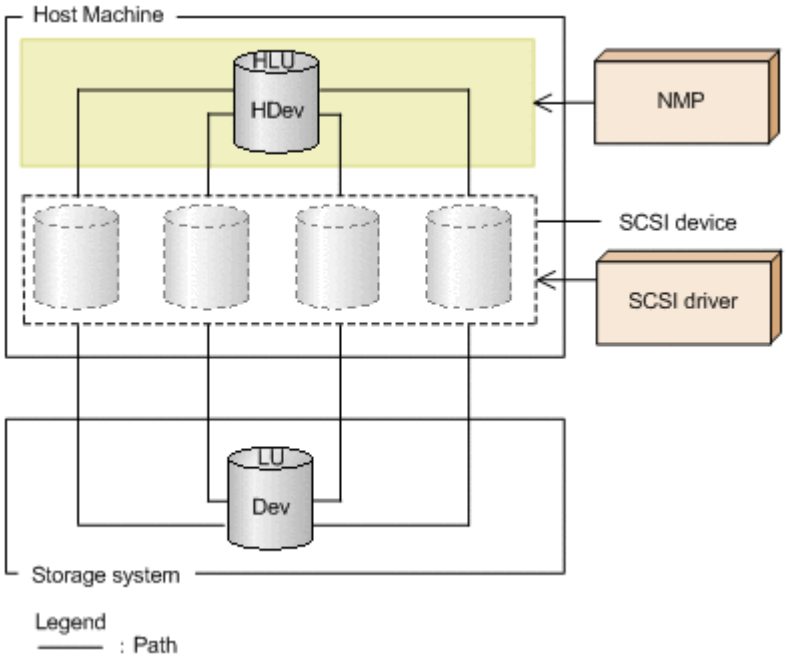

Figure 2-4 LU configuration recognized by the host after the installation of HDLM

The following table lists and describes the components recognized by the host.

Table 2-3 Components recognized by the host

Components	Description
HLU	An LU that the host recognizes via the HDLM driver. This type of LU is called a *host LU*. Regardless of how many paths are connected to it, only one host LU is recognized for each LU in the storage system.
HDev	A Dev in an LU that the host recognizes via the HDLM driver. This type of Dev is called a *host device*.

Program configuration

HDLM is actually a combination of several programs. Because each program corresponds to a specific HDLM operation, it is important to understand the name and purpose of each program, along with how they are all interrelated.

The following figure shows the configuration of the HDLM programs.

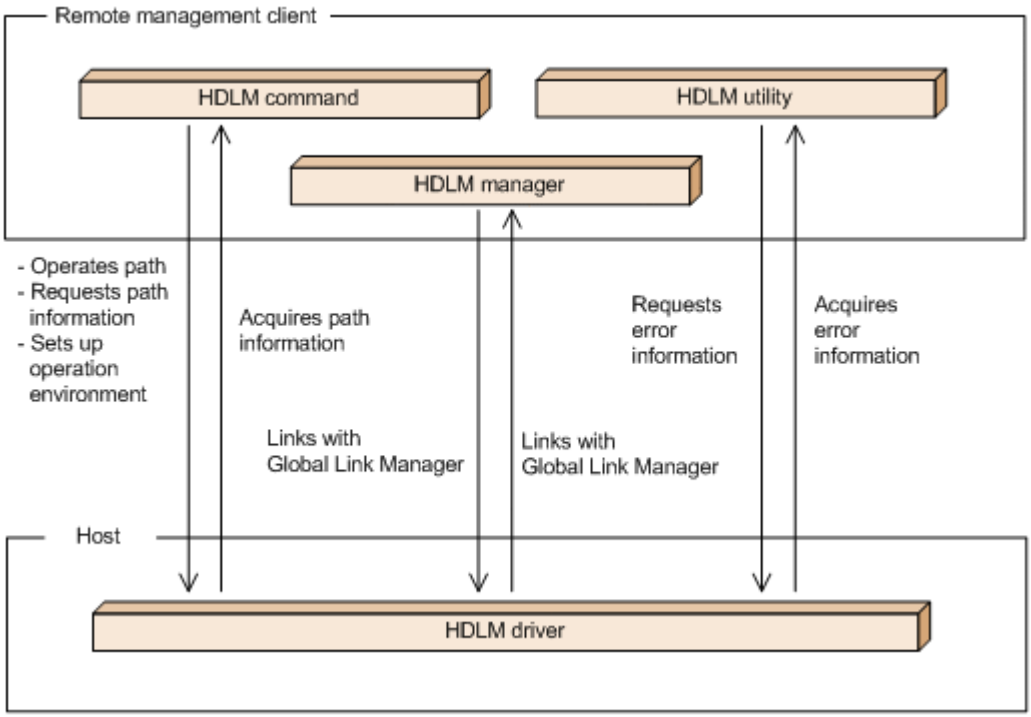

Figure 2-5 Configuration of the HDLM programs

The following table lists and describes the functions of these programs.

Table 2-4 Functions of HDLM programs

Program name	Functions
HDLM command	Provides the `dlnkmgr` command, which enables you to: • Manage paths • Display error information • Set up the HDLM operating environment
HDLM utility	Provides the HDLM utility, which enables you to: • Collect error information • Perform unattended installations of HDLM • Perform unattended removals of HDLM • Specify user account settings required for linking with Global Link Manager
HDLM manager	Monitors the operational status of hosts by linking with Global Link Manager.
HDLM driver	Controls all the HDLM functions, manages paths, and detects errors. • Save settings of an HDLM operating environment. • Perform path health checking and automatic failback, by linking with the VMware vSphere ESXi functionality. • Output path error messages to syslog on ESXi .

HDLM driver and NMP positions

NMP is a multipath module provided by VMware, and uses SATP and PSP to perform failovers and load balancing of paths. SATP is a submodule that performs path failovers for a device, and changes the path status when NMP detects a path failure. PSP is a submodule that selects paths for a device, and determines the destination path when NMP issues I/O.

The HDLM driver includes the SATP and PSP submodules provided by HDLM. Storage systems supported by HDLM use a combination of HDLM SATP and either HDLM PSP or VMware PSP.

The HDLM driver and NMP are positioned above the SCSI driver, causing each application on a guest OS to access LUs in the storage system via the HDLM driver and NMP.

The following figure shows the positioning of the HDLM driver and NMP.

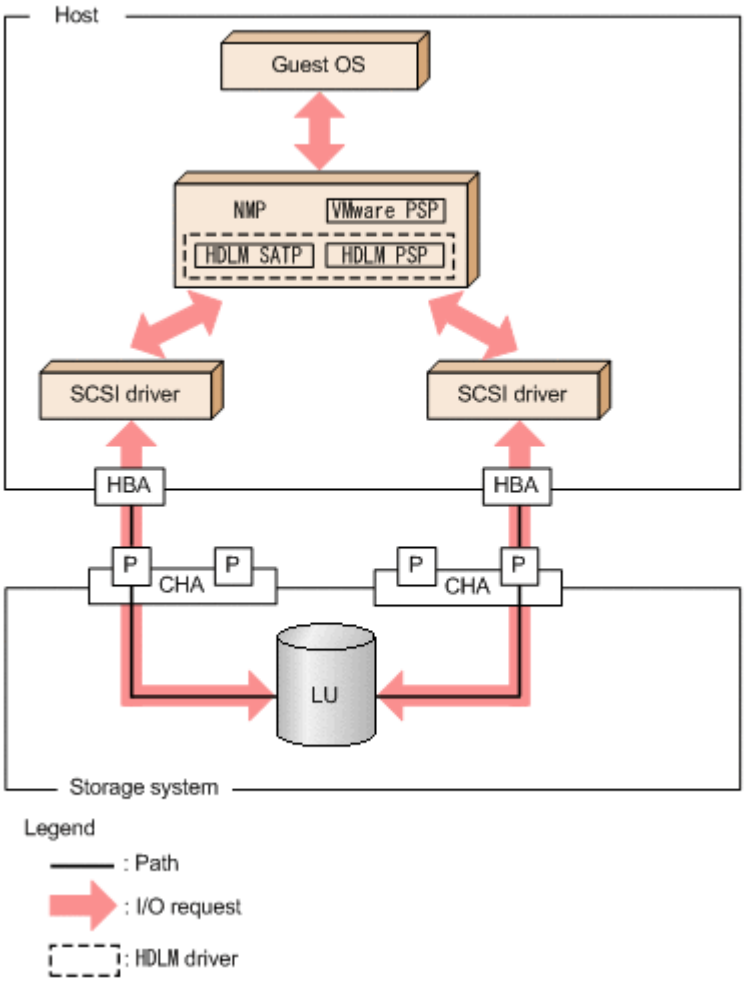

Figure 2-6 Positioning of HDLM driver and NMP

Distributing a load using load balancing

When the system contains multiple paths to a single LU, HDLM can distribute the load across the paths by using multiple paths to transfer the I/O data. This function is called *load balancing,* and it prevents a single, heavily loaded path from affecting the performance of the entire system.

Note that some I/O operations managed by HDLM can be distributed across all, available paths, and some cannot. Therefore, even when the load balancing function is used, a particular I/O operation might not necessarily allocate data to every available path. RAID Manager issuing IOCTL to a command device is an example of an I/O operation that cannot allocate data to every path.

Figure 2-7 Flow of I/O data when the load balancing function is not used on page 2-9 shows the flow of I/O data when the load balancing function is not used. *Figure 2-8 Flow of I/O data when the load balancing function is used on page 2-10* shows the flow of I/O data when the load balancing function is used. Both figures show examples of I/O operations being issued for the same LU by multiple applications.

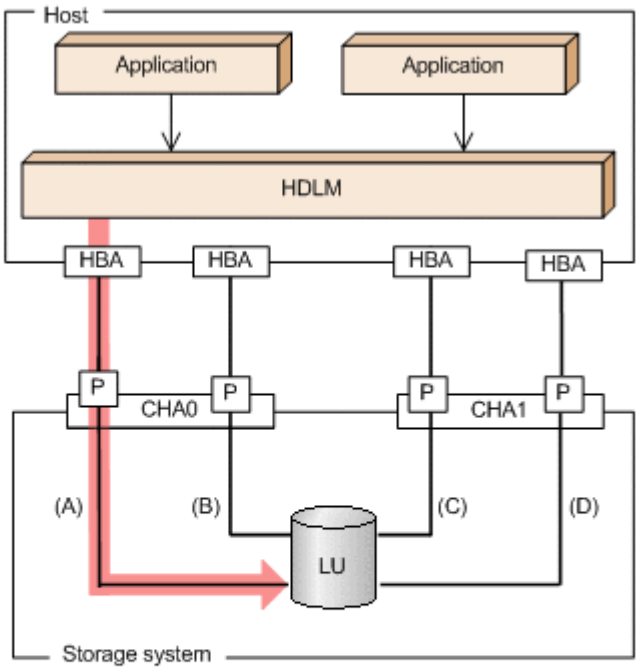

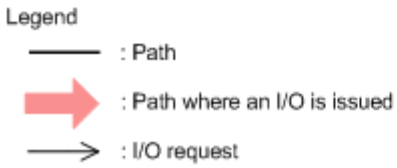

Figure 2-7 Flow of I/O data when the load balancing function is not used

When the load balancing function is not used, I/O operations converge onto a single path (A). The load on that one path (A) will cause a bottleneck, which might cause problems with system performance.

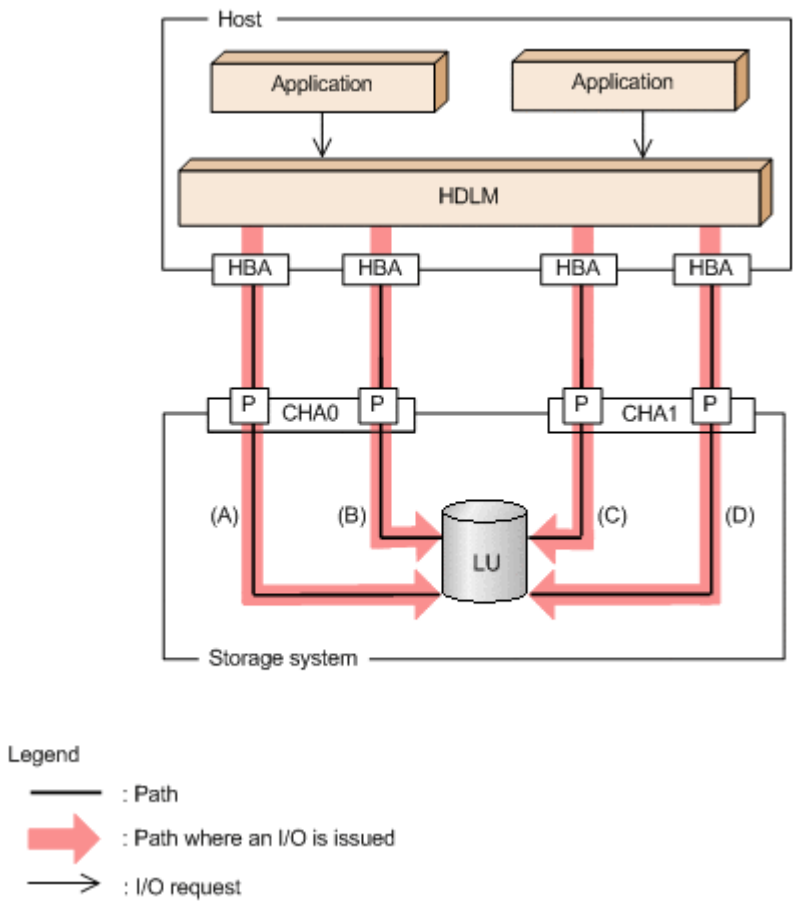

Figure 2-8 Flow of I/O data when the load balancing function is used

When the load balancing function is used, I/O operations are distributed via multiple paths (A, B, C, and D). This helps to prevent problems with system performance and helps prevent bottlenecks from occurring.

Paths to which load balancing is applied

This subsection describes the paths to which the load balancing function is applied.

When all paths are owner paths

If the storage system is supported by HDLM, usually all paths are owner paths. In this case, the load is balanced among all paths that access the same LU. If some of the paths become unusable due to, for example, a failure, the load will be balanced among the remaining usable paths.

For the example in *Figure 2-8 Flow of I/O data when the load balancing function is used on page 2-10*, the load is balanced among the four paths A, B, C, and D. If one of the paths were to become unusable, the load would be balanced among the three, remaining paths.

Note

When the HUS100 series is used, if the dynamic I/O path control function is disabled (the default setting), the load is balanced among all paths that access the same LU.

When non-owner paths exist

If both owner paths and non-owner paths exist, HDLM will select the path to be used next from the owner paths, and then from the non-owner paths. In order to prevent system performance from slowing down, HDLM does not perform load balancing between owner paths and non-owner paths. Therefore, if some of the owner paths become unusable due to, for example, a failure, load balancing will be performed among the remaining usable owner paths. It is only when absolutely no owner paths are available, that load balancing is then performed among the non-owner paths.

For the example in *Figure 2-9 Load balancing when both owner paths and non-owner paths exist on page 2-11*, suppose that the paths (A) and (B) are owner paths, and the paths (C) and (D) are non-owner paths. When the LU is accessed, the load is balanced between the two paths A and B, which are both owner paths. When one of the paths (A) cannot be used, then the LU is accessed from the only other owner path (B). When both of the owner paths (A and B) cannot be used, the load is then balanced between two other, non-owner paths (C and D).

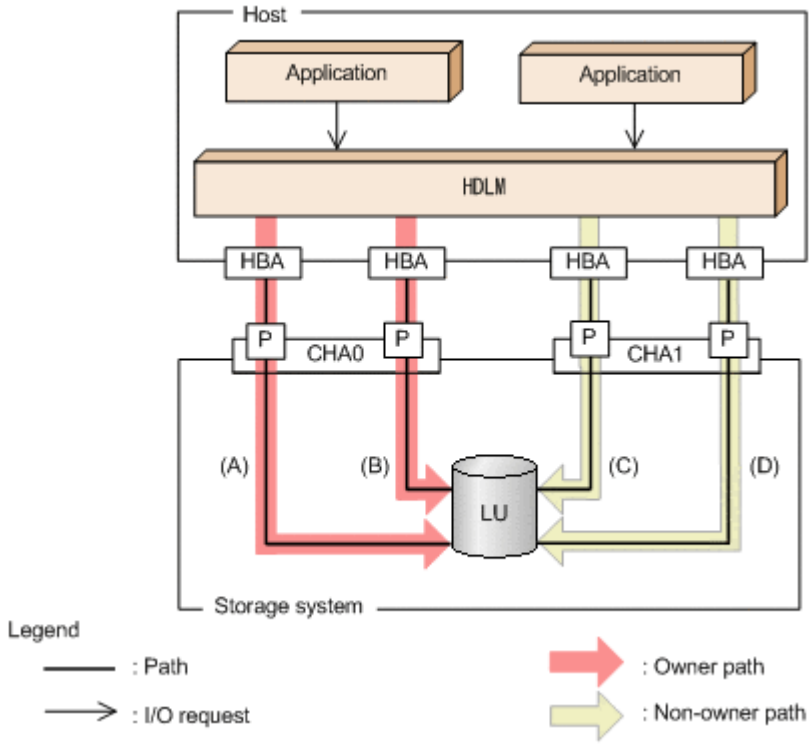

Figure 2-9 Load balancing when both owner paths and non-owner paths exist

The following describes a case in which non-owner paths exist.

- When the dynamic I/O path control function is enabled in the HUS100 series:

  When the dynamic I/O path control function is enabled, the controller selected by the dynamic load balance controller function is recognized as the owner controller. Other controllers are recognized as non-owner controllers. Paths that pass through the owner controller are owner paths, and paths that do not pass through the owner controller are non-owner paths.

  For details about the dynamic I/O path control function, see *Distributing a load by using the dynamic I/O path control function on page 2-22*.

- When a global-active device is used and the non-preferred path option is set:

  When a global-active device is used, the default settings of the storage system specify that all paths are owner paths. Load balancing is performed on all paths that access the primary and secondary volumes of global-active device pairs.

  However, if the primary site and the secondary site are far apart, I/O performance might be low for I/O issued to a site other than the location of the host. In such a case, specify the non-preferred path option on the storage system at the site where the host is not located. A path for which the non-preferred path option is specified is a non-owner path and cannot be used until all the owner paths become unavailable.

  If you specify the non-preferred path option on the storage system when the HDLM device is already configured, execute the `refresh` operation of the HDLM command, or restart the host.

Load balancing algorithms

The load balancing function uses VMware PSPs or PSPs provided by HDLM. The following table lists the load balancing algorithms that HDLM can use.

Table 2-5 Load balancing algorithms

Algorithm name	PSP name
Extended Round Robin	HTI_PSP_HDLM_EXRR
Extended Least I/Os	HTI_PSP_HDLM_EXLIO
Extended Least Blocks	HTI_PSP_HDLM_EXLBK
Most Recently Used (VMware)	VMW_PSP_MRU
Round Robin (VMware)	VMW_PSP_RR

PSPs for the Extended Round Robin, Extended Least I/Os, and Extended Least Blocks algorithms are installed together with HDLM. These algorithms determine which path to allocate based on whether the data of the I/O to be issued is sequential with the data of the I/O that was issued immediately beforehand.

If the data is sequential, the path used will be the one to which the data of the I/O that was issued immediately beforehand was distributed. However, if

a specified number of I/Os has been issued to a path, processing switches to the next path.

If the data is not sequential, these algorithms select the path to be used each time an I/O request is issued.

- Extended Round Robin:
  The paths are simply selected in order from among all the connected paths.
- Extended Least I/Os
  The path that has the least number of I/Os being processed is selected from among all the connected paths.
- Extended Least Blocks
  The path that has the least number of I/O blocks being processed is selected from among all the connected paths.

The default algorithm is the Extended Least I/Os algorithm, which is set when HDLM is first installed. When an upgrade installation of HDLM is performed, the algorithm that is currently being used is inherited.

Select the load balancing algorithm most suitable for the data access patterns of your system environment. However, if there are no recognizable data access patterns, we recommend using the default algorithm, the Extended Least I/Os algorithm.

You can specify the load balancing function by the `dlnkmgr` command's `set` operation. For details on the `set` operation, see *set (sets up the operating environment) on page 6-15*.

Performing failovers and failbacks using path switching

When the system contains multiple paths to an LU and an error occurs on the path that is currently being used, HDLM can switch to another functional path, so that the system can continue operating. This is called a *failover*.

If a path in which an error has occurred recovers from the error, HDLM can then switch back to that path. This is called a *failback*.

Two types of failovers and failbacks are available:

- Automatic failovers and failbacks
- Manual failovers and failbacks

Failovers and failbacks switch which path is being used and also change the statuses of the paths. A path status is either *online* or *offline*. An online status means that the path can receive I/Os. On the other hand, an offline status means that the path cannot receive I/Os. A path will go into the offline status for the following reasons:

- An error occurred on the path.
- A user executed the HDLM command's `offline` operation.

For details on the `offline` operation, see offline (places paths offline) on page 6-7.

For details on path statuses and the transitions of those statuses, see Path status transition on page 2-17.

Automatic path switching

The following describes the automatic failover and failback functions, which automatically switch a path.

Automatic failovers

If you detect an error on the path that is currently being used, you can continue to use the system by having the status of that path automatically changed to offline, and then automatically have the system switch over to another online path. This functionality is called *automatic failover*. Automatic failovers can be used for the following levels of errors:

Critical

A fatal error that might stop the system.

Error

A high-risk error, which can be avoided by performing a failover or some other countermeasure.

For details on error levels, see Table 8-1 Format and meaning of the message ID KAPLnnnnn-l on page 8-2 in Format and meaning of message IDs on page 8-2..

HDLM will select the path to be used next from among the various paths that access the same LU, starting with owner paths, and then non-owner paths.

If the storage system is supported by HDLM, usually all paths are owner paths. As a result, all of the paths accessing the same LU can be possible switching destinations. For example, in Figure 2-10 Path switching on page 2-15, the LU is accessed using only the one path (A). However, after that path is placed offline, the switching destination can come from any of the other three paths (B, C, or D).

When non-owner paths exist, HDLM will select the path to be used next from among the various paths that access the same LU, starting with the owner paths, and then the non-owner paths. For example, in Figure 2-10 Path switching on page 2-15, the owner controller of an LU is CHA0, and access to the LU is made via only one path (A). After that access path (A) is placed offline, the first choice for the switching destination is the other path connected to CHA0 (B). If an error also occurs on that path (B), then the next possibility for a path comes from one of the two paths (C or D) connected to CHA1.

Note

Non-owner paths exist in the following cases:

- When the HUS100 series is being used, and the dynamic I/O path control function is enabled
- When a global-active device is being used, and the non-preferred path option is set

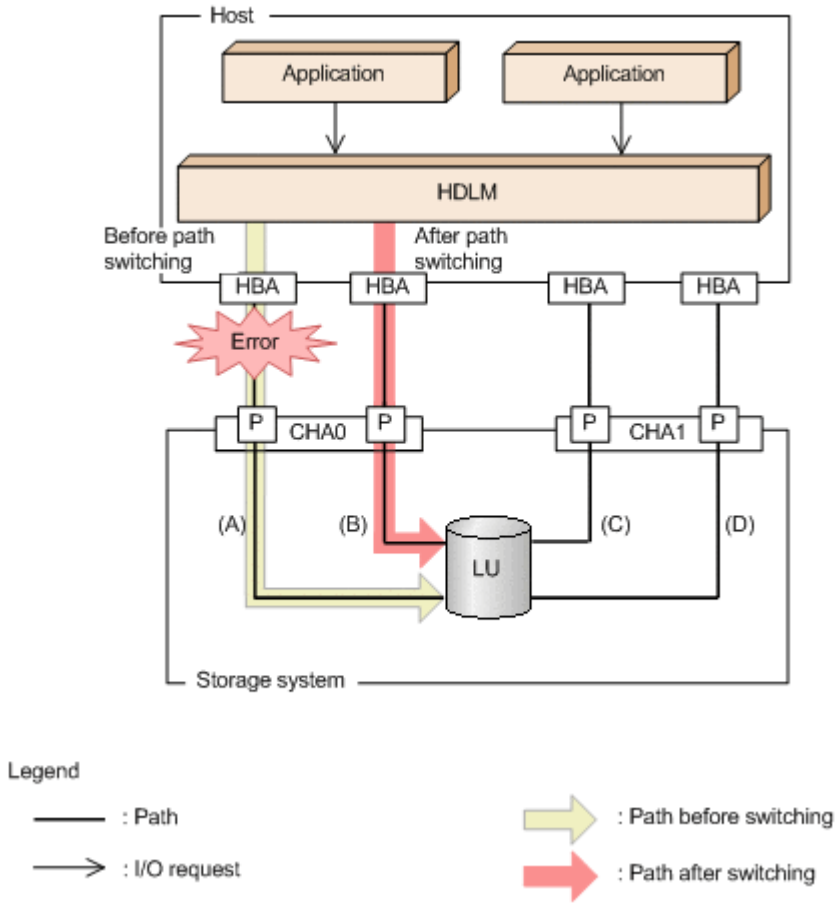

Figure 2-10 Path switching

Automatic failbacks

When a path recovers from an error, HDLM can automatically place the recovered path back online. This function is called the *automatic failback* function.

When non-owner paths exist, HDLM will select the path to be used next from the online owner paths, and then from the online non-owner paths. When a non-owner path is used because all of the owner-paths are placed offline, if an owner path recovers from an error and HDLM automatically places the recovered path online, the path will be automatically switched over from the non-owner path to the owner path that recovered from the error.

When an intermittent error# occurs in a path, automatic failback repeatedly places the path offline and then online again, which can cause I/O performance to drop. In this case, we recommend that you configure

intermittent error monitoring to exclude paths with intermittent errors from the automatic failback process.

Automatic failback is implemented by functionality provided by VMware vSphere ESXi, and cannot be disabled.

Intermittent error monitoring can be specified in the HDLM command's `set` operation. For details on the `set` operation, see *set (sets up the operating environment) on page 6-15*.

Note

Non-owner paths exist in the following cases:

- When the HUS100 series is being used, and the dynamic I/O path control function is enabled
- When a global-active device is being used, and the non-preferred path option is set

#

An *intermittent error* means an error that occurs irregularly because of some reason such as a loose cable connection.

Manual path switching

You can switch the status of a path by manually placing the path online or offline. Manually switching a path is useful, for example, when system maintenance needs to be done.

You can manually place a path online or offline by doing the following:

- Execute the `dlnkmgr` command's `online` or `offline` operation.
  For details on the `online` operation, see *online (places paths online) on page 6-10*. For details on the `offline` operation, see *offline (places paths offline) on page 6-7*.

However, if there is only one online path for a particular LU, that path cannot be manually switched offline. Also, a path with an error that has not been recovered from yet cannot be switched online.

HDLM uses the same algorithms to select the path that will be used next, regardless of whether automatic or manual path switching is used.

In a normal state, all paths that access the same LU are candidates for the switching destination path. However, if non-owner paths exist, HDLM selects the switching destination path from the owner paths and then from the non-owner paths.

Executing the `online` operation places the offline path online. For details on the `online` operation, see *online (places paths online) on page 6-10*. If non-owner paths are also used, HDLM selects the path to use from the online owner paths, and then from the online non-owner paths.

Note

Non-owner paths exist in the following cases:

- When the HUS100 series is being used, and the dynamic I/O path control function is enabled
- When a global-active device is being used, and the non-preferred path option is set

Path status transition

Each of the online and offline statuses described in *Performing failovers and failbacks using path switching on page 2-13* is further subdivided into several statuses. The path statuses (the online path statuses and offline path statuses) are explained below.

The online path statuses

The online path statuses are as follows:

- `Online`

  I/Os can be issued normally.

- `Online(S)`#

  The paths to the primary volume (P-VOL) in the HAM environment have recovered from an error, but I/O to the P-VOL is suppressed.

- `Online(D)`#

  The paths to the primary volume (P-VOL) in an HAM environment have recovered from an error, but I/O to the P-VOL is suppressed. If an error occurs in all the paths to a secondary volume (S-VOL), the status of the P-VOL paths will be automatically changed to the `Online` status. To change the status to the `Online(D)` status, specify the `-dfha` parameter for the HDLM command's `online` operation.

#

The status changes to this status when using HAM (High Availability Manager).

The offline path statuses

The offline path statuses are as follows:

- `Offline(C)`

  The status in which I/O cannot be issued because the `offline` operation was executed. For details on the `offline` operation, see *offline (places paths offline) on page 6-7*.

  The (C) indicates the command attribute, which indicates that the path was placed offline by using the command.

- `Offline(E)`

  The status indicating that an I/O could not be issued on a given path, because an error occurred on the path.

  The (E) in Offline(E) indicates the error attribute, which indicates that an error occurred in the path.

Correspondence between VMware vSphere and HDLM path statuses

The following table shows the correspondence between the path statuses displayed by VMware vSphere and the path statuses displayed in the output of the HDLM command's `view` operation.

Table 2-6 Correspondence between VMware vSphere and HDLM path statuses

Path status displayed by VMware vSphere	Path status displayed by the HDLM
`active`, and `standby`	`Online`
`off`	`Offline(C)`
`dead`, `unavailable`, and `perm_loss`	`Offline(E)`

Status transitions of a path

The following figure shows the status transitions of a path.

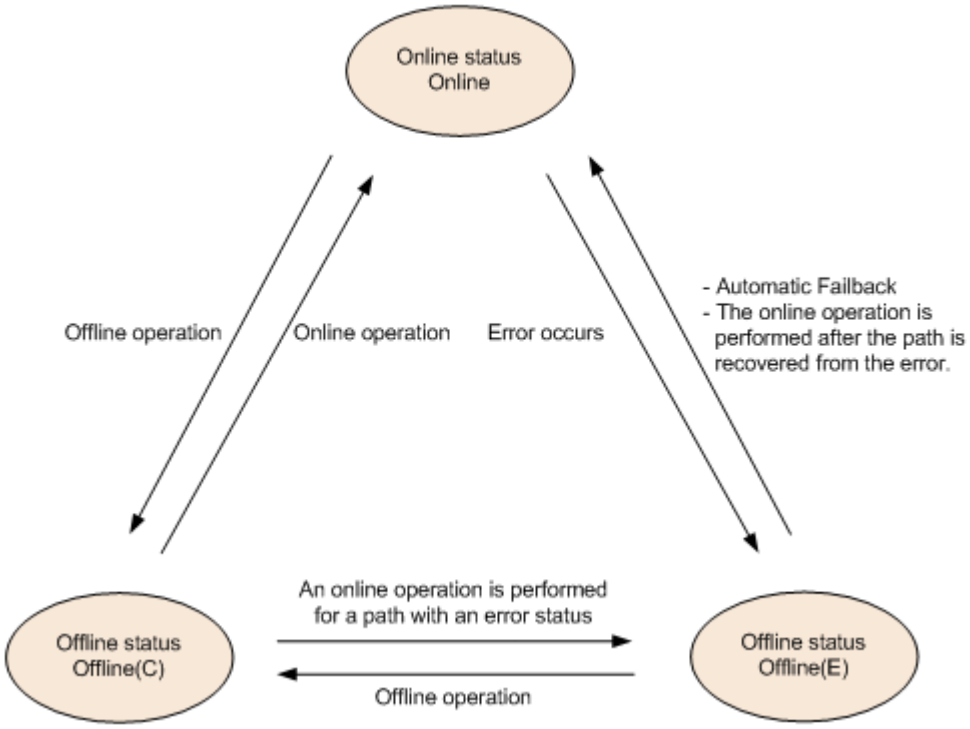

Figure 2-11 Path status transitions

Legend:

Online operation: Online operation performed by executing the `dlnkmgr` command's `online` operation.

Offline operation: Offline operation performed by executing the `dlnkmgr` command's `offline` operation.

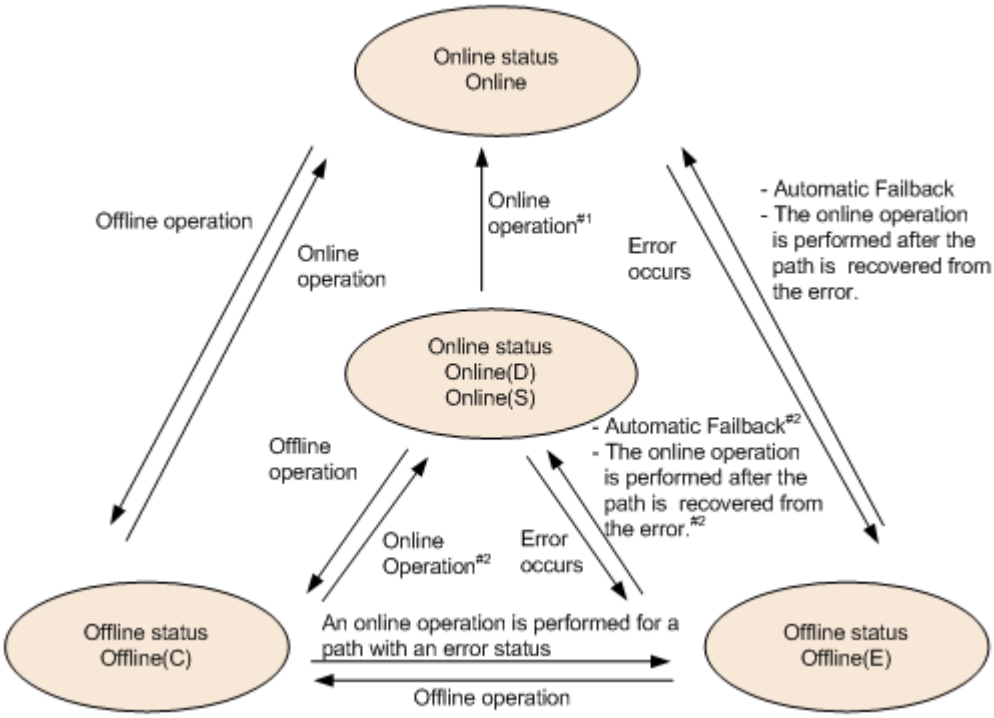

Figure 2-12 Path status transitions (P-VOL in HAM environment)

Legend:

Online operation: Online operation performed by executing the `dlnkmgr` command's `online` operation.

Offline operation: Offline operation performed by executing the `dlnkmgr` command's `offline` operation.

#1

Also when an error occurs in all the paths to an S-VOL in the `Online(D)` status.

#2

When I/O operations are processed on an S-VOL.

The last available online path for each LU cannot be placed offline by executing the `offline` operation. This ensures access to the LU. For details on the `offline` operation, see *offline (places paths offline) on page 6-7*. A path that is recovered from an error by the automatic failback function is automatically placed in online status.

When you are using intermittent error monitoring, the path in which the intermittent error occurred is not automatically placed online when the path recovers from the error. In such a case, place the path online manually.

Note

If there is a path failure immediately after a path is placed offline by using the `dlnkmgr` command, Offline(C) might change to Offline(E). If an offline operation was performed, wait for a fixed period of time (about 2 minute), check the path status by using the `dlnkmgr` command, and

make sure that the status has changed to Offline(C). If it is Offline(E), retry the offline operation.

Monitoring intermittent errors

An intermittent error refers to an error that occurs irregularly because of something like a loose cable. In the event of an intermittent error, automatic failback will repeatedly occur causing I/O performance to drop. To prevent this from happening, HDLM can automatically remove the path where an intermittent error is occurring from the paths that are subject to automatic failbacks. This process is called *intermittent error monitoring*.

A path in which an error occurs a specified number of times within a specified interval is determined to have an intermittent error. The path where an intermittent error occurs remains in error status until the user executes the HDLM command's `online` operation to place the path back to online. Automatic failbacks are not performed for such paths. This status is referred to as the *not subject to auto failback* status.

Checking intermittent errors

You can check the paths in which intermittent errors have occurred by viewing the execution results of the HDLM command's `view` operation.

For details on the `view` operation, see *view (displays information) on page 6-24*.

Setting up intermittent error monitoring

When you set up the intermittent error monitoring function, first specify whether to enable or disable the function. When you enable the intermittent error monitoring function, specify the following monitoring conditions: the error monitoring interval, and the number of times that the error needs to occur. If you enable the intermittent error monitoring function and an error occurs on a particular path the specified number of times within the specified error monitoring interval (in minutes), then an intermittent error will occur on the path.

You can set up intermittent error monitoring by executing the `dlnkmgr` command's `set` operation.

For details on how to configure intermittent error monitoring, see *set (sets up the operating environment) on page 6-15*.

Intermittent error monitoring actions

During intermittent error monitoring, HDLM manages the history of errors# that occurred on each path. If an error occurs on a path, HDLM counts the number of errors that occurred within the time period specified as the error monitoring interval, immediately before that error occurred. If the number

reaches the specified condition, then an intermittent error will occur on the path.

For example, if 30 is set for the error monitoring interval and 3 for the number of times that the error needs to occur, an intermittent error occurs on the path if an error occurs three times or more within a time period from 30 minutes before the error to the moment the error occurs. The path will be excluded from automatic failbacks. A path excluded from automatic failback has an error status until the user executes the HDLM command's `online` operation.

#

An error means a path status transition from Online to Offline(E).

When a user changes the intermittent error information

During intermittent error monitoring, if a user changes any of the values set for the intermittent error monitoring or path status, the following are initialized: the history of errors on the paths managed by HDLM, and the information for the paths that were excluded from automatic failback. The following table lists the user operations that cause initialization of intermittent error information and the target paths for initialization.

Table 2-7 User operations that cause initialization of intermittent error information and the target paths for initialization

User operation that causes initialization of intermittent error information	Paths for which intermittent error information is initialized
Disabling the intermittent error monitoring function (`off`)	All paths
Re-enabling the intermittent error monitoring function (`on`) (No change in the setting values)	
Changing the error monitoring interval or the nubmer of times that the error needs to occur	
Changing the path to the blocked state (Offline(C))	The paths for which the states have been changed
Changing the path to the active state (Online)	
Restarting the host	All paths

When intermittent error monitoring is enabled, if the intermittent error information is initialized, monitoring starts again from that moment. To set the paths that have been excluded from automatic failback to stay excluded, change the paths to the blocked state (Offline(C)) before you change the intermittent error monitoring setting.

You can check whether intermittent error monitoring is being performed for a path, by executing the HDLM command's `view -path` operation with the `-iem` parameter specified, and then checking the displayed IEP item. If a numerical value of 0 or greater is displayed for this item, intermittent error monitoring is being performed on the path.

For details about the `view` operation, see *view (displays information) on page 6-24*.

Detecting errors by using path health checking

The function that checks the statuses of paths for which no I/O operations are being performed and detects errors is called *path health checking*.

The path health check function periodically checks the status of online paths regardless of whether any I/O activity is occurring. If an error is detected in a path, the path health checking function switches the status of that path to `Offline(E)`. You can use the `dlnkmgr` command's `view` operation to check the path error.

The health check function is implemented by functionality provided by VMware vSphere ESXi. You cannot disable the health check function or change the interval between checks.

Distributing a load by using the dynamic I/O path control function

The result of using HDLM load balancing to distribute a load can be improved, by applying the HDLM dynamic I/O path control function to the storage system in which the dynamic load balance control function is installed.

What is the dynamic load balance control function

In a system configuration in which multiple hosts and a storage system are connected, the I/O processing load tends to concentrate on the controller of the storage system, causing throughput performance of the entire system decrease. The dynamic load balance controller function evaluates such load statuses on the controller and prevents storage system performance from decreasing.

The following is a list of the storage systems that provide the dynamic load balance controller function and are supported by HDLM.

- HUS100 series

Dynamic I/O path control function

In a storage system in which the dynamic load balance controller function is installed, enable the dynamic I/O path control function to make the HDLM load balancing effective.

When the dynamic I/O path control function is enabled, the controller selected by the dynamic load balance controller function is recognized as the owner controller. Other controllers are recognized as non-owner controllers. Paths that pass through the owner controller are owner paths, and paths that do not pass through the owner controller are non-owner paths.

The dynamic I/O path control function can be enabled or disabled based on each host, connected storage system, or LU.

The dynamic I/O path control function can be specified by using the HDLM command's `set` operation. For details about the `set` operation, see *set (sets up the operating environment) on page 6-15*.

Error management

For troubleshooting purposes, HDLM collects information and stores it into log files. The following figure shows the flow of data when error information is collected on a host which is running HDLM.

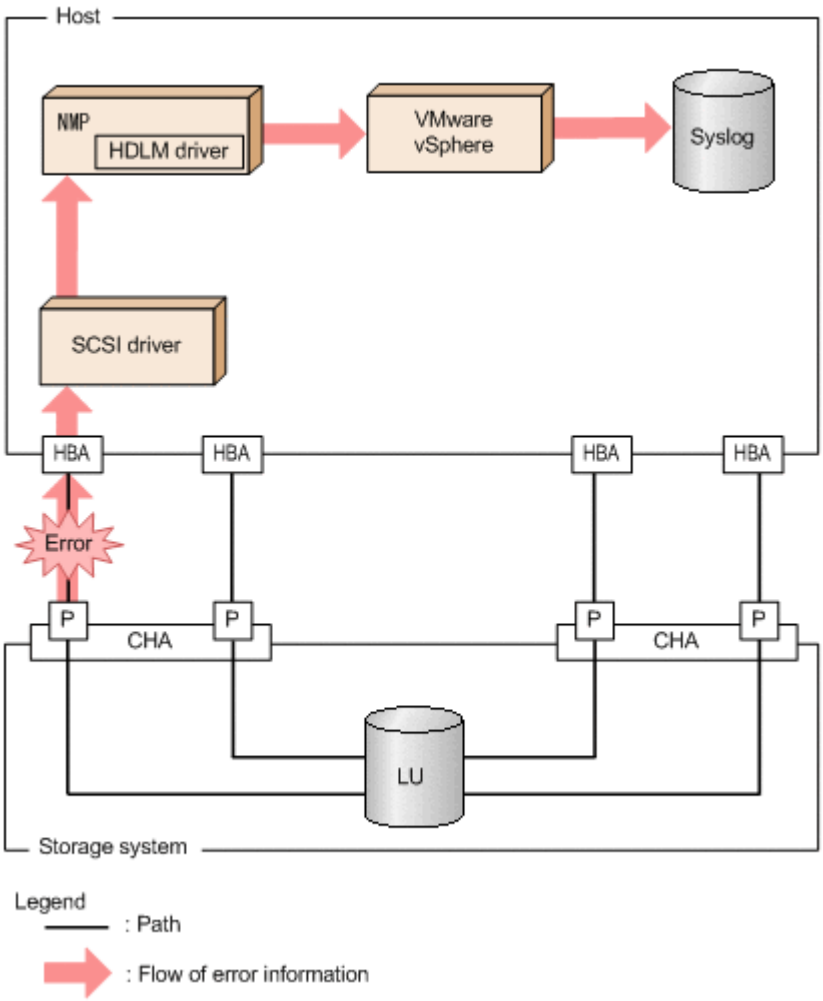

Figure 2-13 Flow of data when path error information is collected

Logs might be collected in layers below HDLM, such as for the SCSI driver. For more details, see the VMware vSphere documentation.

Types of collected logs

HDLM collects information about errors that occurred on ESXi hosts and on a remote management client.

- Log data for errors that occurred on the ESXi host is output to syslog on the ESXi host, This log data corresponds to I/O errors and to changes in path status.
- Log data for errors that occurred on a remote management client is output as remote management client error log data.

You can use this error information to examine the error status and analyze the error cause.

The following table shows the error information for an ESXi host.

Table 2-8 Types of ESXi host error information

Log name	Description	Output destination
Syslog	Information about detected errors is collected.	The default file path is `/var/log/vmkernel.log`. For details on how to set the syslog file path, refer to the VMware vSphere documentation.

For details on how to change the collection level, see *Table 8-1 Format and meaning of the message ID KAPLnnnnn-l on page 8-2* in *Format and meaning of message IDs on page 8-2*.

The following table shows the error information for remote management clients.

Table 2-9 Types of remote management client error information

Log name	Description	Output destination
Integrated trace file	This log collects operation log data of the HDLM command.#1	The default file name is *program-installation-drive*`:\Program Files (x86)`#2`\HITACHI\HNTRLib2\spool\hntr2`*n*`.log` (where *n* is a file number) To specify the output destination folder and the file prefix for the integrated trace file, use the Hitachi Network Objectplaza Trace Library (HNTRLib2) utility.
Process-specific-trace information file#3	Operation logs for the HDLM commands	The name of the process-specific-trace information file is as follows: `\Program Files (x86)\HITACHI\DynamicLinkManagerForVMware\log\dlnkmgr[1-2].log`#4
Trace file	This log collects trace information on the HDLM	The trace file name is

Log name	Description	Output destination
	manager at a user-specified level. If an error occurs, you might need to change the settings and collect trace information.	\Program Files (x86)\HITACHI\DynamicLinkManagerForVMware\log\hdlmtr[1-64].log#4
Error log	This log collects information about errors that occurred while HDLM was linked with Global Link Manager.	HDLM manager logs \Program Files (x86)\HITACHI\DynamicLinkManagerForVMware\log\dlmmgr[1-16].log#4 Hitachi Command Suite Common Agent Component logs \Program Files (x86)\HITACHI\DynamicLinkManagerForVMware\log\dlmwebagent[1-*N*].log#4 The value *N* depends on the setting in the dlmwebagent.properties file. The default value is 2. To change the number of files, set a value from 2 to 16 for logFileNum.
Event log	This log collects audit log data.	Event logs (application logs)

#1

In Windows 10, the operation log is output to the process-specific-trace information file.

#2

For Windows 8 (x86), Program Files (x86) is Program Files.

#3

This file is output for Windows 10.

#4

The underlined part indicates a folder specified during installation.

After obtaining these files, be sure to also copy them to a backup location.

Collecting error information

You need to collect HDLM error information both from the ESXi host and from remote management clients. Note that, if syslog transfer is set up in the ESXi host, you need to collect syslog from the transfer destination.

Collecting from the ESXi host

You can collect ESXi host log information by either of the following methods:

- Using a vSphere client, export the system logs.
  Use the default setting for specifying the sources to be collected.

- Log in to the ESXi host and execute the `vm-support` command to collect the system logs.

Also, if a kernel panic occurs on the ESXi host, collect a core dump for investigation.

Collecting from the remote management client

HDLM provides the utility for collecting HDLM error information (`DLMgetras`).

By using the `DLMgetras` utility, you can simultaneously collect all the information required for analyzing errors: information such as integrated trace files, process-specific-trace information file, definition files, and information on the OS. You can use the collected information for when you contact your HDLM vendor or maintenance company.

For details on the `DLMgetras` utility, see *The DLMgetras utility for collecting HDLM error information on page 7-2*.

Collecting audit log data

HDLM and other Hitachi storage-related products provide an audit log function so that compliance with regulations, security evaluation standards, and industry-specific standards can be shown to auditors and evaluators. The following table describes the categories of audit log data that Hitachi storage-related products can collect.

Table 2-10 Categories of audit log data that can be collected

Category	Explanation
`StartStop`	An event indicating the startup or termination of hardware or software, including: • OS startup and termination • Startup and termination of hardware components (including micro-program) • Startup and termination of software running on storage systems, software running on SVPs (service processors), and Hitachi Command Suite products
`Failure`	An abnormal hardware or software event, including: • Hardware errors • Software errors (such as memory errors)
`LinkStatus`	An event indicating the linkage status between devices: • Link up or link down
`ExternalService`	An event indicating the result of communication between a Hitachi storage-related product and an external service, including: • Communication with a RADIUS server, LDAP server, NTP server, or DNS server, • Communication with the management server (SNMP)

Category	Explanation
`Authentication`	An event indicating that a connection or authentication attempt made by a device, administrator, or end-user has succeeded or failed, including: • FC login • Device authentication (FC-SP authentication, iSCSI login authentication, or SSL server/client authentication) • Administrator or end-user authentication
`AccessControl`	An event indicating that a resource access attempt made by a device, administrator, or end-user has succeeded or failed, including: • Device access control • Administrator or end-user access control
`ContentAccess`	An event indicating that an attempt to access critical data has succeeded or failed, including: • Access to a critical file on a NAS or content access when HTTP is supported • Access to the audit log file
`ConfigurationAccess`	An event indicating that a permitted operation performed by the administrator has terminated normally or failed, including: • Viewing or updating configuration information • Updating account settings, such as adding and deleting accounts • Setting up security • Viewing or updating audit log settings
`Maintenance`	An event indicating that a maintenance operation has terminated normally or failed, including: • Adding or removing hardware components • Adding or removing software components
`AnomalyEvent`	An event indicating an abnormal state such as exceeding a threshold, including: • Exceeding a network traffic threshold • Exceeding a CPU load threshold • Reporting that the temporary audit log data saved internally is close to its maximum size limit or that the audit log files have wrapped back around to the beginning
	An event indicating an occurrence of abnormal communication, including: • A SYN flood attack or protocol violation for a normally used port • Access to an unused port (such as port scanning)

The categories of audit log data that can be collected differ depending on the product. The following sections explain only the categories of audit log data

that can be collected by HDLM. For the categories of audit log data that can be collected by a product other than HDLM, see the corresponding product manual.

Categories and audit events that HDLM can output to the audit log

The following table lists and explains the categories and audit events that HDLM can output to the audit log. The severity is also indicated for each audit event.

Table 2-11 Categories and audit events that can be output to the audit log

Category	Explanation	Audit event	Severity #1	Message ID
`StartStop`	Startup and termination of the software	Startup of the HDLM manager was successful.	6	KAPL15401-I
		Startup of the HDLM manager failed.	4	KAPL15402-W
		The HDLM manager stopped.	6	KAPL15403-I
		Startup of the `DLMgetras` utility	6	KAPL15060-I
		Termination of the `DLMgetras` utility#2	6	KAPL15061-I
		Startup of the `dlmperfinfo` utility was successful.	6	KAPL15320-I
		Startup of the `dlmperfinfo` utility failed.	4	KAPL15321-W
		The `dlmperfinfo` utility stopped.	6	KAPL15322-I
		The `dlmperfinfo` utility terminated.#2	4	KAPL15323-W
`Authentication`	Administrator or end-user authentication	Permission has not been granted to execute the HDLM command.	4	KAPL15111-W
		Permission has not been granted to start or stop the HDLM manager.	4	KAPL15404-W

Category	Explanation	Audit event	Severity #1	Message ID
ConfigurationAccess	Viewing or updating configuration information	Initialization of path statistics was successful.	6	KAPL15101-I
		Initialization of path statistics failed.	4	KAPL15102-W
		An attempt to place a path online or offline was successful.	6	KAPL15103-I
		An attempt to place a path online or offline failed.	4	KAPL15104-W
		Setup of the operating environment was successful.	6	KAPL15105-I
		Setup of the operating environment failed.	4	KAPL15106-W
		An attempt to display program information was successful.	6	KAPL15107-I
		An attempt to display program information failed.	4	KAPL15108-W
		An attempt to display HDLM management-target information was successful.	6	KAPL15109-I
		An attempt to display HDLM management-target information failed.	4	KAPL15110-W
		The status of a path was successfully changed to Online.	6	KAPL15116-I
		The refresh operation was successful.	6	KAPL15121-I

Category	Explanation	Audit event	Severity #1	Message ID
		The refresh operation failed.	4	KAPL15122-W

#1
The severity levels are as follows:
4: Warning, 6: Information

#2
If you use **Ctrl+C** to terminate the utility while it is running, audit log data indicating that the utility has finished will not be output.

Requirements for outputting audit log data

HDLM can output audit log data when all of the following conditions are satisfied:

- The Event Log service is running on the remote management client.
- The output of audit log data has been enabled by using the HDLM command's `set` operation.

However, audit log data might still be output regardless of the above conditions if, for example, an HDLM utility is executed from external media.#

#:
The following audit log data is output:

- Categories: `StartStop`, `Authentication`, and `ConfigurationAccess`
- Severity: 6 (Error, Warning, or Information)

Note

- You might need to perform operations such as changing the log size and backing up and saving collected log data, because the amount of audit log data might be quite large.

Destination and filtering of audit log data

Audit log data is output to event logs of the remote management client.

You can also filter the audit log output by specifying a severity level and type for the HDLM command's `set` operation.

Filtering by severity:
The following table lists the severity levels that can be specified.

Table 2-12 Severity levels that can be specified

Severity	Audit log data to output	Correspondence with event log type
0	Error	Error
1		
2		
3		
4	Error and Warning	Warning
5		
6	Error, Warning, and Information	Information
7		

Filtering by category:

The following categories can be specified:

- `StartStop`
- `Authentication`
- `ConfigurationAccess`
- All of the above

For details on how to specify audit log settings, see *Setting up the HDLM functions on page 3-30*.

Audit log data formats

The following describes the format of audit log data:

The following is the format of audit log data. This data can be viewed in the **Description** box of the **Event Properties** dialog box, which is opened when an event is double-clicked in the **Application Log** list of the **Event Viewer** administrative tool on the remote management client:

program-name [*process-ID*]: *message-section*

The following shows the format of *message-section* and explains its contents.

The format of message-section:

common-identifier, *common-specification-revision-number*, *serial-number*, *message-ID*, *date-and-time*, *entity-affected*, *location-affected*, *audit-event-type*, *audit-event-result*, *subject-ID-for-audit-event-result*, *hardware-identification-information*, *location-information*, *location-identification-information*, *FQDN*, *redundancy-identification-information*, *agent-information*, *host-sending-request*, *port-number-sending-request*, *host-receiving-request*, *port-number-receiving-request*, *common-operation-ID*, *log-type-information*, *application-identification-information*, *reserved-area*, *message-text*

Up to 950 bytes of text can be displayed for each *message-section*.

Table 2-13 Items output in the message section

Item#	Explanation
Common identifier	Fixed to `CELFSS`
Common specification revision number	Fixed to `1.1`
Serial number	Serial number of the audit log message
Message ID	Message ID in KAPL15*nnn-l* format
Date and time	The date and time when the message was output. This item is output in the following format: *yyyy–mm–dd*T*hh*:*mm*:*ss*.*s time-zone*
Entity affected	Component or process name
Location affected	Host name
Audit event type	Event type
Audit event result	Event result
Subject ID for audit event result	Depending on the event, an account ID, process ID, or IP address is output.
Hardware identification information	Hardware model name or serial number
Location information	Hardware component identification information
Location identification information	Location identification information
FQDN	Fully qualified domain name
Redundancy identification information	Redundancy identification information
Agent information	Agent information
Host sending request	Name of the host sending a request
Port number sending request	Number of the port sending a request
Host receiving request	Name of the host receiving a request
Port number receiving request	Number of the port receiving a request
Common operation ID	Operation serial number in the program
Log type information	Fixed to `BasicLog`
Application identification information	Program identification information
Reserved area	This field is reserved. No data is output here.

Item#	Explanation
Message text	Data related to the audit event is output.

#: The output of this item depends on the audit event.

Example of the message section for the audit event *An attempt to display HDLM management-target information was successful*:

```
CELFSS,1.1,0,KAPL15109-I,
2008-04-09T10:18:40.6+09:00,HDLMCommand,hostname=moon,Configur
ationAccess,Success,uid=root,,,,,,,,,,,,,,,"Information about
HDLM-management targets was successfully displayed. Command
Line = dlnkmgr view -path "
```

Example of the message section for the audit event *Startup of the `dlmperfinfo` utility was successful*:

```
CELFSS,1.1,0,KAPL15320-I,
2018-01-30T08:53:52.5+09:00,dlmperfinfoVM,hostname=moon,StartS
top,Success,pid=7148,,,,,,,,,,,,,,," The dlmperfinfo utility
successfully started. Command Line = dlmperfinfo.exe -s
10.197.75.182 -u **** -p ********* "
```

Integrated HDLM management using Global Link Manager

By using Global Link Manager, you can perform integrated path management on systems running multiple instances of HDLM.

For large-scale system configurations using many hosts running HDLM, the operational load for managing paths on individual hosts increases with the size of the configuration. By linking HDLM and Global Link Manager, you can centrally manage path information for multiple instances of HDLM and reduce operational load. In addition, you can switch the operational status of paths to perform system-wide load balancing, and centrally manage the system by collecting HDLM failure information in Global Link Manager.

Global Link Manager collects and manages information about paths from instances of HDLM installed on multiple hosts. Even if multiple users manage these hosts, they can control and view this centralized information from client computers.

Note

You cannot manage a single HDLM host from multiple Global Link Manager servers. In addition, a single remote management client cannot be shared by multiple Global Link Manager servers.

The following figure is an example of a system configuration using HDLM and Global Link Manager.

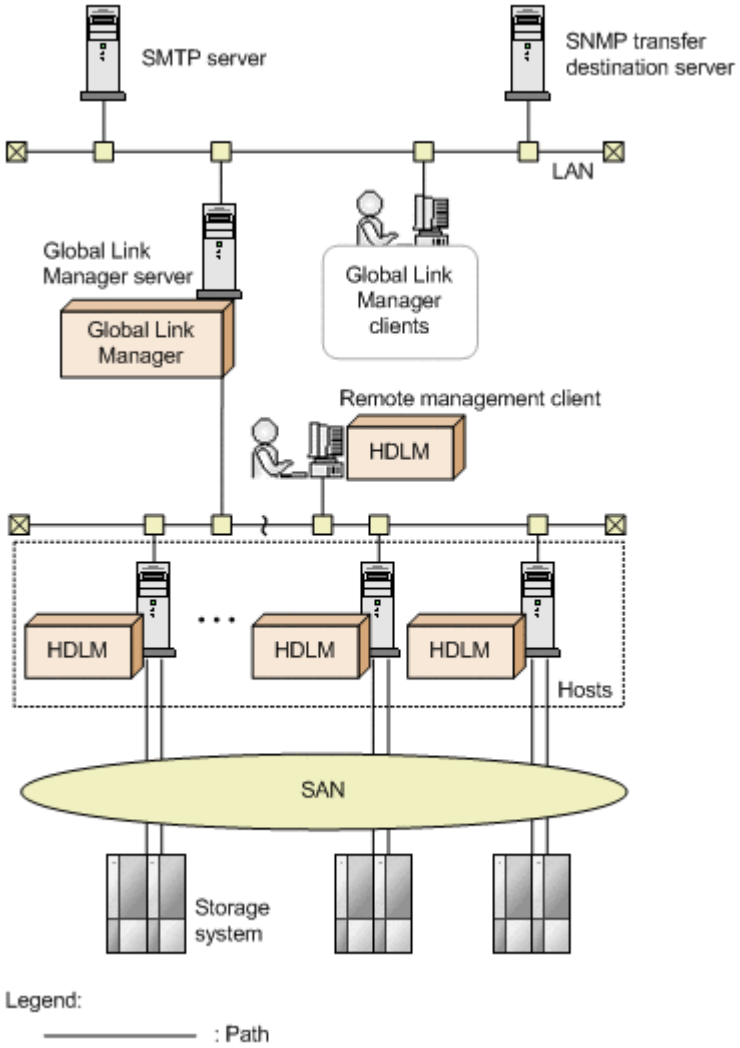

Figure 2-14 Example system configuration using HDLM and Global Link Manager

3

Creating an HDLM environment

This chapter explains how to set up an HDLM environment and also how to erase environment settings.

Make sure that you have already installed HDLM and configured the function settings.

HDLM system requirements

Check the following before installing HDLM:

For the requirements for using HDLM in an HAM environment, see the release notes of HDLM.

Hosts and OSs supported by HDLM

HDLM can be installed on computers running the following operating systems:

Host OS support

The following versions of VMware vSphere ESXi are supported as an OS for host computers:

- VMware vSphere ESXi 6.0 Standard Edition/ Enterprise Edition/ Enterprise Plus Edition
- VMware vSphere ESXi 6.0 Update 1 Standard Edition/ Enterprise Edition/ Enterprise Plus Edition
- VMware vSphere ESXi 6.0 Update 2 Standard Edition/ Enterprise Edition/ Enterprise Plus Edition
- VMware vSphere ESXi 6.0 Update 3 Standard Edition/ Enterprise Edition/ Enterprise Plus Edition
- VMware vSphere ESXi 6.5 Standard Edition/ Enterprise Edition/ Enterprise Plus Edition
- VMware vSphere ESXi 6.5 Update 1 Standard Edition/ Enterprise Edition/ Enterprise Plus Edition
- VMware vSphere ESXi 6.5 Update 2 Standard Edition/ Enterprise Edition/ Enterprise Plus Edition
- VMware vSphere ESXi 6.5 Update 3 Standard Edition/ Enterprise Edition/ Enterprise Plus Edition
- VMware vSphere ESXi 6.7 Standard Edition/ Enterprise Edition/ Enterprise Plus Edition
- VMware vSphere ESXi 6.7 Update 1 Standard Edition/ Enterprise Edition/ Enterprise Plus Edition
- VMware vSphere ESXi 6.7 Update 2 Standard Edition/ Enterprise Edition/ Enterprise Plus Edition
- VMware vSphere ESXi 6.7 Update 3 Standard Edition/ Enterprise Edition/ Enterprise Plus Edition
- VMware vSphere ESXi 7.0 Standard Edition/ Enterprise Edition/ Enterprise Plus Edition

Remote management client OS support

The following table lists the operating systems that can run on a remote management client.

Table 3-1 OS support for remote management clients

OS	Service pack
Windows 8(x86)	No service pack
Windows 8(x64)	No service pack
Windows 10(x64)	No service pack
Windows Server 2012 R2(x64)	No service pack
Windows Server 2016(x64)#	No service pack

Note

In this manual, Windows running on a 32-bit processor is referred to as *x86*, and Windows running on a 64-bit processor is referred to as *x64*.

#

VMware PowerCLI is the only CLI that can be used.

A remote management client can run on a machine in the same LAN as the host, or on a guest OS installed on the host itself.

JRE used when linking with Global Link Manager

When HDLM is linked with Global Link Manager, use the JRE that comes with HDLM. If the JRE versions listed in the table below is installed on the remote management client, you can also use that JRE version. To use the JRE version installed on the remote management client, see the *Hitachi Global Link Manager Installation and Configuration Guide*.

Table 3-2 JRE used when linking with Global Link Manager

OS	JRE
Windows 8(x86) Windows 8(x64)	JRE 8.0(32bit)
Windows 10(x64)	JRE 8.0(32bit)
Windows Server 2012 R2(x64)	JRE 8.0(32bit)
Windows Server 2016(x64)	JRE 8.0(32bit)

CLI to be used on a remote management client

VMware vSphere CLI or VMware PowerCLI must be installed as a prerequisite program on each remote management client.

When using VMware vSphere CLI

VMware vSphere CLI is a prerequisite program for a remote management client. Make sure that VMware vSphere CLI is installed before installing HDLM. The following versions of VMware vSphere CLI are supported.

- VMware vSphere CLI 6.0
- VMware vSphere CLI 6.0 Update 2
- VMware vSphere CLI 6.5
- VMware vSphere CLI 6.7

When using VMware PowerCLI

The following table shows the prerequisites.

Table 3-3 Prerequisites for using VMware PowerCLI

Prerequisite OS or application	Version	Remarks
VMware PowerCLI	11.3.0 11.4.0 11.5.0 12.0.0	• This is to be installed by the user. • If the host is an ESXi 7.0 host, install version 12.0.0. Version 12.0.0 is supported for ESXi 6.5 and later versions.
Windows OS	• Windows 10(x64) • Windows Server 2012 R2(x64) • Windows Server 2016(x64)	• This is the OS supported by VMware PowerCLI 11.3 and later versions. • 32-bit OSs are not supported.
.NET Framework	4.7 or a later version	• This is the most recent version that is supported by VMware PowerCLI. • This is to be installed by the user.
Microsoft Visual C++ 2015-2019 x86 Redistributable	14.24.28127	• This is installed when HDLM is installed. However, if version 14.24.28127 or a later version is already installed, this application is not installed.

Storage systems supported by HDLM

HDLM supports the following storage systems:

If an FC-SAN is used:

- Hitachi Virtual Storage Platform

- Hitachi Virtual Storage Platform 5100
- Hitachi Virtual Storage Platform 5500
- Hitachi Virtual Storage Platform 5100H
- Hitachi Virtual Storage Platform 5500H
- Hitachi Virtual Storage Platform G1000
- Hitachi Virtual Storage Platform G1500
- Hitachi Virtual Storage Platform F1500
- Hitachi Virtual Storage Platform E990
- Hitachi Virtual Storage Platform G200
- Hitachi Virtual Storage Platform G350
- Hitachi Virtual Storage Platform G370
- Hitachi Virtual Storage Platform G400
- Hitachi Virtual Storage Platform G600
- Hitachi Virtual Storage Platform G700
- Hitachi Virtual Storage Platform G800
- Hitachi Virtual Storage Platform G900
- Hitachi Virtual Storage Platform F350
- Hitachi Virtual Storage Platform F370
- Hitachi Virtual Storage Platform F400
- Hitachi Virtual Storage Platform F600
- Hitachi Virtual Storage Platform F700
- Hitachi Virtual Storage Platform F800
- Hitachi Virtual Storage Platform F900
- Hitachi Virtual Storage Platform N400
- Hitachi Virtual Storage Platform N600
- Hitachi Virtual Storage Platform N800
- HUS100 series
- HUS VM
- HPE StorageWorks P9500 Disk Array
- HPE XP8 Storage
- HPE XP7 Storage

If an IP-SAN is used:

- Hitachi Virtual Storage Platform 5100
- Hitachi Virtual Storage Platform 5500
- Hitachi Virtual Storage Platform 5100H
- Hitachi Virtual Storage Platform 5500H
- Hitachi Virtual Storage Platform E990
- Hitachi Virtual Storage Platform G200

- Hitachi Virtual Storage Platform G350
- Hitachi Virtual Storage Platform G370
- Hitachi Virtual Storage Platform G400
- Hitachi Virtual Storage Platform G600
- Hitachi Virtual Storage Platform G700
- Hitachi Virtual Storage Platform G800
- Hitachi Virtual Storage Platform G900
- Hitachi Virtual Storage Platform F350
- Hitachi Virtual Storage Platform F370
- Hitachi Virtual Storage Platform F400
- Hitachi Virtual Storage Platform F600
- Hitachi Virtual Storage Platform F700
- Hitachi Virtual Storage Platform F800
- Hitachi Virtual Storage Platform F900
- Hitachi Virtual Storage Platform N400
- Hitachi Virtual Storage Platform N600
- Hitachi Virtual Storage Platform N800
- HUS100 series

The supported storage systems require a dual controller configuration. If you use the system in a HUB environment, you must set a unique loop ID for every connected host and storage system. For details about the micro-program versions for using HDLM, see the HDLM *Release Notes*.

Storage system settings

Storage system settings are required for using HDLM. For setting procedures, refer to documentations provided by the Hitachi storage system.

Memory and disk capacity requirements

This section describes memory and disk capacity requirements.

Memory requirements

The memory requirements for a host and remote management client are as follows:

- Host
  21 MB
- Remote management client
  40 MB

Disk requirements

The disk space requirements for hosts and remote management clients are as follows:

- Host
  600KB
- Remote management client
  250 MB + 20 MB#1

#1

The default value for the size of the log files for Hitachi Command Suite Common Agent Component.

The size of each log file (`dlmwebagent[1-N].log`) is 9900 KB (approximately 10 MB). The size of the log files is calculated as approximately 20 MB because two log files are created by default.

You can create a maximum of 16 log files depending on the setting in the `dlmwebagent.properties` file. If you create 16 log files, the size of the log files will be approximately 160 MB.

Number of LUs and paths that are supported in HDLM

The following table lists the number of LUs and paths that are supported by HDLM.

Table 3-4 Number of LUs and paths that are supported by HDLM

Item	Number supported
Number of LUs	• For VMware vSphere ESXi 6.0 1 to 256 • For VMware vSphere ESXi 6.5 1 to 512 • For VMware vSphere ESXi 6.7 1 to 1024 • For VMware vSphere ESXi 7.0 1 to 1024
Number of paths per LU	1 to 32
Total number of paths	• For VMware vSphere ESXi 6.0 1 to 1024 • For VMware vSphere ESXi 6.5 1 to 2048 • For VMware vSphere ESXi 6.7 1 to 4096 • For VMware vSphere ESXi 7.0 1 to 4096

HDLM version for remote management clients and ESXi hosts

For an ESXi host, install HDLM whose version is the same as or earlier than the version of HDLM installed on the remote management client.

Notes

When installing HDLM whose version is earlier than the version of HDLM installed on a remote management client, note the following restrictions:

- Install HDLM version 8.0.0 or later.
- Do not perform operations using HDLM commands if those operations are not supported by the earlier HDLM version.

  The following operations are not supported:

  - 8.0.0:

    `dlnkmgr refresh -gad`
  - 8.1.0 or earlier:

    `dlnkmgr set -exrndpathusetimes`

    `dlnkmgr view -sys -exrndpathusetimes`
  - 8.4.0 or earlier:

    `dlnkmgr refresh -stname`

  To check the HDLM version, execute `dlnkmgr view -sys`.
- Even if you display the operation format by executing an HDLM command with the host connection option specified, the operation format supported by the HDLM version of the remote management client will be displayed.

Flow for creating an HDLM environment

Set up the environment to use HDLM as follows.

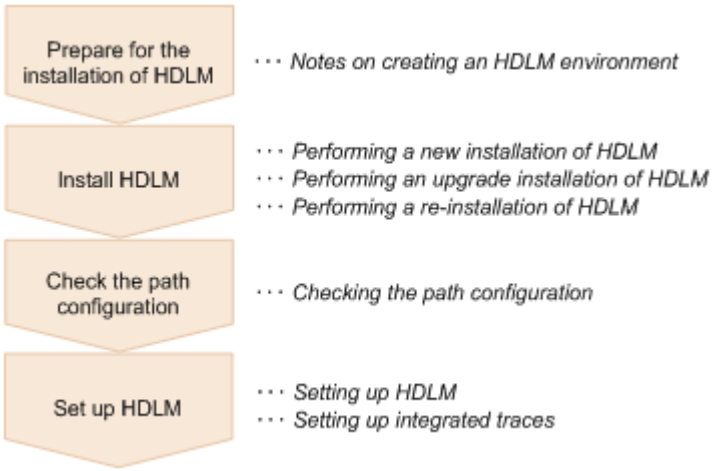

Figure 3-1 Flow of HDLM environment setup

HDLM installation types

This subsection describes the following types of HDLM installation: new installation, upgrade installation, and re-installation.

New installation of HDLM:

Installing HDLM on a server on which HDLM has not been installed is called a *new installation of HDLM*.

Upgrade installation of HDLM:

Installing a newer version of HDLM over the existing version without removing the existing version is called an *upgrade installation of HDLM*.

Re-installation of HDLM:

A re-installation of HDLM involves installing the same version of HDLM again to repair an existing installation. You must remove HDLM before re-installing it.

Notes on creating an HDLM environment

This section provides notes on creating an HDLM environment.

- Make sure that all HBAs that are on a single host and connected to HDLM-managed disks are of the same type and have the same microprogram version. If you are using more than one type of HBA, paths will not be able to be switched when an error occurs.
- If the Windows version of HDLM is already installed on the machine that is to serve as the remote management client, remove it before proceeding. The VMware and Windows versions of HDLM cannot coexist on the same remote management client.
- If you install HDLM for the first time, or perform an upgrade installation of HDLM after the license has expired, a license key is necessary. To update the HDLM license, execute the `dlnkmgr` command's `set-lic` operation. The expiration date of the license key is determined by the license key specified in the license key file or the input license key type. For information on license key types and the `set` operation, see *set (sets up the operating environment) on page 6-15* .
- If you install HDLM while resident software (such as antivirus software) is running, HDLM might not operate correctly. Before installing HDLM, make sure that you have stopped all software programs, including all resident software.
- HDLM uses the Windows Installer service. Therefore, when you install HDLM, take the following precautions:
    - In the **Startup Type** setting for the Windows Installer service, specify **Manual** or **Automatic**.
    - Before installing HDLM, make sure that no other programs are using the Windows Installer service.

If you install HDLM while the **Startup Type** setting for the Windows Installer service is disabled or while another program is using the Windows Installer service, the installation might fail.

If this problem occurs, make sure that both of the above conditions are satisfied, and then install HDLM again.

Be aware that even though an upgrade or re-installation of HDLM failed, the Add/Remove Programs window might indicate that HDLM has been installed normally.

- In Windows 8 (x64), Windows 10 (x64), Windows Server 2012 R2 (x64), and Windows Server 2016 (x64), we recommend that you install HDLM in a folder other than `Program Files`.
- By using the auto deploy function, a VMware vCenter Server support tool, you can specify an image file to which HDLM plugins are installed.

  To use the auto deploy function to change the HDLM settings on the OS for which provisioning is performed, you need to perform the following operations:

  - Execute the `dlnkmgr` command from the remote management client.
  - At the auto deploy server, apply the host profile of the relevant host.

  Unless you apply the host profile, HDLM setting changes will not be saved when the host restarts.
- When you install HDLM and start the ESXi host, the following message is output to syslog to indicate that HDLM's SATP claim rules are duplicated, but this does not affect the operation: "Duplicate user rule found..."
- If Lockdown Mode is enabled on an ESXi host, you cannot perform operations from a remote management client. For this reason, disable Lockdown Mode before you execute an HDLM command or perform an operation from Global Link Manager. Moreover, because Global Link Manager functions cannot collect information while Lockdown Mode is enabled, disable the following Global Link Manager functions before you perform an operation using Lockdown Mode.

  - Managing Alerts
  - Path Availability Information
- Notes on Linking with Global Link Manager

  - Do not register a single HDLM host on two or more Global Link Manager servers. In addition, do not share a single remote management client from multiple Global Link Manager servers.
- To set up multiple remote management clients, do not connect them to the same host.
- When HDLM is installed, a Visual C++ 2015-2019 Redistributable Package is installed if necessary.
- .NET Framework 4.7 or later must be installed in the environment in which the remote management client is to be installed. If .NET Framework 4.7 or later is not installed, the installation of the remote management client will stop.

- Use the `dlmrmcenv` utility to specify whether to use VMware vSphere CLI or VMware PowerCLI as the prerequisite program used for the remote management client. VMware vSphere CLI is the default program when HDLM is installed. We recommend that you use VMware vSphere CLI if ESXi 6.x is used on the host. If ESXi 7.x is used on the host, you must specify VMware PowerCLI because VMware vSphere CLI is not supported.

  VMware PowerCLI 12.0.0 supports ESXi 7.0, but does not support ESXi 6.0. For this reason, if you are using ESXi 6.0 to 7.0, you must prepare a separate remote management client for VMware vSphere CLI and for VMware PowerCLI.
- If Global Link Manager is linked, you cannot switch between VMware vSphere CLI and VMware PowerCLI on the same remote management client. You must prepare a separate remote management client for VMware vSphere CLI and for VMware PowerCLI.

  If Global Link Manager is not linked, you can switch between VMware vSphere CLI and VMware PowerCLI on the same remote management client. To switch to the CLI you want to use, use the `dlmrmcenv` utility. If you want to use a Credential Store file, you must use the one corresponding to the CLI that you switched to. You cannot use a Credential Store file that does not correspond to the CLI that you switched to, because the Credential Store files of VMware vSphere CLI and VMware PowerCLI are not compatible.
- If you use VMware PowerCLI to link with Global Link Manager, make sure that you use Global Link Manager version 8.7.6 or later.
- VMware vSphere CLI and VMware PowerCLI use the 443/TCP port for communication with the ESXi host. This port number cannot be changed.

Notes when using VMware vSphere CLI

- To use VMware vSphere CLI 6.0 on the remote management client, perform the following settings:
  - Add the `esxcli` command path# to the PATH environment variable.

    If you link HDLM with Global Link Manager, add the path to the PATH system environment variable. When doing so, do not enclose the path in double quotation marks (").

    #

    Add the following path:

    VMware-vSphere-CLI-installation-folder\bin
  - Add the thumbprint of the host to the Credential Store file.
- To use VMware vSphere CLI 6.5 or 6.7 on the remote management client, perform the following settings:
  - For VMware vSphere CLI 6.5 or 6.7, Perl is not installed. Install Perl by following the instructions in the Release Notes for VMware vSphere CLI 6.5 or 6.7.

- To use ActivePerl, add a path for perl to the environment variable Path. In addition, install the PPM that is necessary to run `credstore_admin.pl`.
- If you perform an upgrade installation of VMware vSphere CLI from version 6.0 to version 6.5 or 6.7, execute the `dlmrmcenv` utility, and then restart the remote management client.
- Add the thumbprint of the host to the Credential Store file.
- On the remote management client, to add the VMware vSphere CLI environment variables perlpath and vclipath to the system environment variables, add the paths specified for perlpath and vclipath to the system environment variable Path as well. When adding a variable to Path, do not enclose the path in double quotation marks (”). If you enclose the variable in double quotation marks (”), operations performed from Global Link Manager might fail.

Notes when using VMware PowerCLI

- To use VMware PowerCLI on the remote management client, specify the following settings:
  - VMware PowerCLI is a cmdlet to be run on Windows PowerShell. If `Restricted`, `AllSigned`, or `Undefined` is set as the execution policy for Windows PowerShell, the command cannot be run. Set RemoteSigned as the execution policy.

    To check the execution policy, run the following command in the command prompt of Windows PowerShell:

    ```
    >Get-ExecutionPolicy
    ```

    If the displayed result is `Restricted`, `AllSigned`, or `Undefined`, change the execution policy to `RemoteSigned`.

    The following is an example of using the command prompt of Windows PowerShell to change the execution policy for the current user to `RemoteSigned`:

    ```
    >Set-ExecutionPolicy RemoteSigned -Scope CurrentUser
    ```

  - After VMware PowerCLI is installed, make sure that the following command runs in the command prompt of Windows PowerShell:

    ```
    >Connect-VIServer -Server "ESXi-host-name-or-IP-address" -
    User "user-name" -Password "password"
    >$esxcli = Get-EsxCli -VMHost $vmHost -V2
    >$esxcli.system.version.get.Invoke()
    Build   : Releasebuild-XXXXXXXX
    Patch   : XX
    Update  : X
    Version : X.X.X
    >Disconnect-VIServer -Server "ESXi-host-name-or-IP-address"
    ```

    A warning or an error might occur when `Connect-VIServer` is running. This is because the certificate of the ESXi host to be

connected is determined to be invalid. For details, visit the VMware website.

If you do not need to check the certificate, run the following command in the command prompt of Windows PowerShell to change the settings of the PowerCLI.

```
>Set-PowerCLIConfiguration -Scope user -
InvalidCertificateAction Ignore
```

- If VMware PowerCLI is used on a remote management client, Global Link Manager cannot be used to manage HDLM.

Installing HDLM

First, check whether HDLM has already been installed on the host and remote management client where you are going to install HDLM. If HDLM has already been installed, follow the procedure described in *Performing an upgrade installation of HDLM on page 3-22* or *Performing a re-installation of HDLM on page 3-23*.

When you install HDLM, Hitachi Network Objectplaza Trace Library will also be installed.

The file path of the Hitachi Network Objectplaza Trace Library integrated trace information file is *program-installation-destination-drive*:`\Program Files (x86)`#`\HITACHI\HNTRLib2\spool\Hntr2`*n*`.log`, where *n* is the number of the integrated trace information file.

#
For Windows 8 (x86), `Program Files (x86)` is `Program Files`.

Performing a new installation of HDLM

The following describes how to perform a new installation of HDLM. Perform the installation process on the remote management client and the host.

The installation procedure described here assumes that VMware vSphere has been installed on the host, and the host and the storage system are connected in a multi-path configuration.

When performing a new installation on a remote management client, you can perform an unattended installation by using the HDLM install utility (`installhdlm`). An unattended installation enables a user to install HDLM without entering information during processing. For details on the `installhdlm` utility, see *The installhdlm utility for installing HDLM on page 7-23*.

To manually perform an installation on the remote management client, follow the procedure in *New installation on remote management client on page 3-14*. To perform an unattended installation, follow the procedure in *Unattended installation on remote management client on page 3-15*.

New installation on remote management client

1. Log on to Windows on the remote management client as a member of the Administrators group.
2. Save the license key file directly under the drive on which Windows is installed.

   ```
   installation-drive:\hdlm_license
   ```

3. Insert the HDLM installation DVD-ROM.
4. In the displayed window, click the **Install** button next to **for VMware** in **Hitachi Dynamic Link Manager**.

   If the window is not displayed, directly execute the installer (`setup.exe`). The installer is stored in *drive-containing-installation-DVD-ROM*`:\HDLM VMware`.

   Windows 8, Windows 10, Windows Server 2012 R2, and Windows Server 2016 support User Account Control (UAC). Therefore, if you execute the installer as a user other than Administrator, you might be asked for administrator permissions. If you are asked for administrator permissions, respond to the displayed dialog box.
5. If installation of the Microsoft Visual C++ Redistributable Package is required, install the Microsoft Visual C++ Redistributable Package. Perform the installation by following the instructions in the dialog box displayed in the window.

   If installation of the Microsoft Visual C++ Redistributable Package fails, check the error message and take any necessary action. Then, install HDLM again.

   Check the following installation logs, which are output to the folder immediately under the system drive:

   - `vcredist_x86_log`
   - `vcredist_x86_000_vcRuntimeMinimum_x86.log`
   - `vcredist_x86_001_vcRuntimeAdditional_x86.log`
6. Follow the instructions shown in the messages that appear in the window.
   - If a license key file was saved in step 2, specify that license key file.
   - If a license key file is not being used, specify the license key directly.
7. Follow the instructions shown in the messages that appear in the window.

   A command prompt window appears during installation and automatically closes when the installation finishes.

   Note

   - Do not manually close the command prompt window.
   - A Windows Security Alert dialog box might appear.

     When linking with Global Link Manager, select Allow access. When not linking with Global Link manager, select Cancel.
8. Check the results of the installation.

If installation ends successfully, a dialog box appears, displaying the KAPL09181-I message. If the message is not displayed, check the message in the *Windows-installation-destination-drive*:\hdlmvminst.log file, and resolve the error. Then, perform installation of HDLM again. If no warning or error message has been output to the hdlmvminst.log file, perform installation of HDLM again, because installation might have been canceled.

9. Restart the remote management client.
10. Log on to Windows on the remote management client as a member of the Administrators group.
11. When using the VMware vSphere CLI, start the command prompt for VMware vSphere CLI as an administrator. When using the VMware PowerCLI, start the command prompt of Windows PowerShell as an administrator.
12. To use the VMware PowerCLI, use the dlmrmcenv utility to specify VMware PowerCLI as the CLI.
13. Execute the HDLM command's view operation to confirm that HDLM has been installed.

    An example of executing the dlnkmgr command's view operation is as follows:

```
PROMPT>dlnkmgr -l view -sys
HDLM Version                  : x.x.x-xx
Service Pack Version          :
HDLM Manager Ver          WakeupTime
Alive        x.x.x-xx     yyyy/mm/dd hh:mm:ss
License Type Expiration
Permanent    -
KAPL01001-I The HDLM command completed normally. Operation name
= view, completion time = yyyy/mm/dd hh:mm:ss
PROMPT>
```

    If *x.x.x-xx* is displayed in HDLM Version, the correct version of HDLM has been installed.

Having installed HDLM on the remote management client, go to *New installation on host on page 3-17*.

Unattended installation on remote management client

Notes on unattended installations

- Do not forcibly stop the execution of the installhdlm utility during an unattended installation of HDLM. Even if you forcibly stop the execution of the installhdlm utility, the HDLM installation will not be stopped. Make sure that you check the results of the installation in installhdlm.log, if you had to forcibly stop the execution of the installhdlm utility.
- The disk capacity necessary for the execution of the installhdlm utility is as follows:

A folder specified in the `workdir` key (if the `workdir` key has not been specified, a folder specified in the TMP or TEMP environment variable) must have at least 20 KB of free disk capacity.

1. Log on to Windows on the remote management client as a member of the Administrators group.
2. Insert the HDLM installation DVD-ROM.
3. Create an installation information settings file.

   For an installation-information settings file, you need to define the license key file name, installation destination folder, and then any other information that is required for the particular installation.

   HDLM provides a sample file in order to simplify the editing process of an installation-information settings file. The sample file is stored in the following location:

   ```
   drive-containing-installation-DVD-ROM:\HDLM_VMware\DLMTools
   \sample_installhdlm.ini
   ```

   To use the sample file, copy it from the DVD-ROM into any folder, and then use a text editor to edit it.

   Items that need to be defined in the installation-information settings file are described in *Contents of an installation-information settings file on page 7-23* below.
4. Launch the **Administrator: Command Prompt** window.
5. Execute the following command to perform an unattended installation.

   ```
   drive-containing-installation-DVD-ROM:\HDLM_VMware\DLMTools
   \installhdlm -f installation-information-settings-file
   ```

   Note

   A Windows Security Alert dialog box might appear.

   When linking with Global Link Manager, select Allow access. When not linking with Global Link manager, select Cancel.

   If installation of the Microsoft Visual C++ Redistributable Package fails, check the error message and take any necessary action. Then, install HDLM again.

   Check the following installation logs, which are output to the folder immediately under the system drive:

   - `vcredist_x86_log`
   - `vcredist_x86_000_vcRuntimeMinimum_x86.log`
   - `vcredist_x86_001_vcRuntimeAdditional_x86.log`
6. Check the results of the installation.

   At the command prompt, check the unattended installation results displayed by the `installhdlm` utility.

   If installation ends successfully, the KAPL09181-I message is output to the command prompt. If the message is not output, check the message in the `installhdlm.log` file, and resolve the error. Then, perform

installation of HDLM again. If no warning or error message has been output to the `installhdlm.log` file, perform installation of HDLM again, because installation might have been canceled.

7. Restart the remote management client.
8. Log on to Windows on the remote management client as a member of the Administrators group.
9. When using the VMware vSphere CLI, start the command prompt for VMware vSphere CLI as an administrator. When using the VMware PowerCLI, start the command prompt of Windows PowerShell as an administrator.
10. To use the VMware PowerCLI, use the `dlmrmcenv` utility to specify VMware PowerCLI as the CLI.
11. Execute the HDLM command's `view` operation to confirm that HDLM has been installed.

    An example of executing the `dlnkmgr` command's `view` operation is as follows:

```
PROMPT>dlnkmgr -l view -sys
HDLM Version                  : x.x.x-xx
Service Pack Version          :
HDLM Manager Ver          WakeupTime
Alive        x.x.x-xx     yyyy/mm/dd hh:mm:ss
License Type Expiration
Permanent    -
KAPL01001-I The HDLM command completed normally. Operation name
= view, completion time = yyyy/mm/dd hh:mm:ss
PROMPT>
```

    If *x.x.x-xx* is displayed in `HDLM Version`, the correct version of HDLM has been installed.

When the unattended installation on the remote management client finishes, go to *New installation on host on page 3-17*.

New installation on host

When ESXi 6.x is used on the host (when the VMware vSphere CLI is used)

The VMware vSphere CLI is used to install HDLM on a host. If the VMware vSphere CLI is not installed on the remote management client, install it and confirm that it can be used to connect to the host before continuing.

In addition, see the HDLM *Release Notes* beforehand to check offline bundle file names and plugin names.

1. Copy the offline bundle files stored in the remote management client to a directory on the host.

   Offline bundle files are stored in the following location on the remote management client.

```
HDLM-installation-folder\plugin
```

2. Start the VMware vSphere CLI on the remote management client.
3. Change the host acceptance level.

   Execute the following command to check the current acceptance level of the host:

   ```
   esxcli --server=host-name --username=user-name --
   password=password software acceptance get
   ```

   Save the command output. You will need it if you remove HDLM in the future.

   After saving the command output, execute the following command to change the host acceptance level:

   ```
   esxcli --server=host-name --username=user-name --
   password=password software acceptance set --
   level=PartnerSupported
   ```

4. Install HDLM on the host.

   Execute the following command. In the `-d` parameter, specify the name of an offline bundle file you copied in step 1.

   ```
   esxcli --server=host-name --username=user-name --
   password=password software vib install -d /any-folder-on-the-
   host/offline-bundle-file-name
   ```

   When the installation process has completed, execute the following command and make sure that the plug-in version number matches that described in the HDLM Release Notes:

   ```
   esxcli --server=host-name --username=user-name --
   password=password software vib list | findstr hdlm
   ```

5. Restart the host.
6. Make sure that the SATP claim rule for HDLM has been applied.
   - Execute the following command, and make sure that the claim rule appears in the command output:

     ```
     esxcli --server=host-name --username=user-name --
     password=password storage nmp satp rule list | findstr
     HTI_SATP_HDLM
     ```

   - If the claim rule does not appear, execute the following commands and register the claim rule. After the registration, go back to step 5 and resume the operation.

     ```
     esxcli --server=host-name --username=user-name --
     password=password storage nmp satp rule add -V HITACHI -M
     "^DF600F*" -s HTI_SATP_HDLM
     ```

```
esxcli --server=host-name --username=user-name --
password=password storage nmp satp rule add -V HITACHI -M
"^OPEN-*" -s HTI_SATP_HDLM
esxcli --server=host-name --username=user-name --
password=password storage nmp satp rule add -V HP -M "^OPEN-
*" -s HTI_SATP_HDLM
esxcli --server=host-name --username=user-name --
password=password storage nmp satp rule add -V HPE -M "^OPEN-
*" -s HTI_SATP_HDLM
```

7. Check the path configuration according to the procedure described in *Checking the path configuration on page 3-29*.
8. If you are managing HDLM by using Global Link Manager, set up the host and remote management client by following the procedure described in *Settings when managing HDLM by using Global Link Manager on page 3-23*.

When ESXi 6.x is used on the host (when the VMware PowerCLI is used)

The VMware PowerCLI is used to install HDLM on a host. If the VMware PowerCLI is not installed on the remote management client, install it and confirm that it can be used to connect to the host before continuing.

In addition, see the HDLM *Release Notes* beforehand to check offline bundle file names and plugin names.

1. Copy the offline bundle files stored in the remote management client to a directory on the host.

   Offline bundle files are stored in the following location on the remote management client.

   ```
   HDLM-installation-folder\plugin
   ```

2. Start the command prompt of Windows PowerShell on the remote management client, and then run the following command to connect to the ESXi host:

   ```
   Connect-VIServer -Server "host-name-or-IP-address" -User "user-
   name" -Password "password"
   $vmHost = Get-VMHost "host-name-or-IP-address"
   $esxcli = Get-EsxCli -VMHost $vmHost -V2
   ```

3. Change the host acceptance level.

   Execute the following command to check the current acceptance level of the host:

   ```
   $esxcli.software.acceptance.get.Invoke()
   ```

   Save the command output. You will need it if you remove HDLM in the future.

   After saving the command output, execute the following command to change the host acceptance level:

```
$esxcli.software.acceptance.set.Invoke(@{level="PartnerSupported"
})
```

4. Install HDLM on the host.

   Execute the following command. In the `-d` parameter, specify the name of an offline bundle file you copied in step 1.

   ```
   $esxcli.software.vib.install.Invoke(@{depot="/any-folder-on-the-
   host/offline-bundle-file-name"})
   ```

   When the installation process has completed, execute the following command and make sure that the plug-in version number matches that described in the HDLM Release Notes:

   ```
   $esxcli.software.vib.list.Invoke() | findstr hdlm
   ```

5. Restart the host.
6. Make sure that the SATP claim rule for HDLM has been applied.
   - Execute the following command, and make sure that the claim rule appears in the command output:

     ```
     Connect-VIServer -Server "host-name-or-IP-address" -User
     "user-name" -Password "password"
     $vmHost = Get-VMHost "host-name-or-IP-address"
     $esxcli = Get-EsxCli -VMHost $vmHost -V2
     $esxcli.storage.nmp.satp.rule.list.Invoke()
     ```

   - If the claim rule does not appear, execute the following commands and register the claim rule. After the registration, go back to step 5 and resume the operation.

     ```
     $esxcli.storage.nmp.satp.rule.add.Invoke(@{vendor="HITACHI";
     model="^DF600F*"; satp="HTI_SATP_HDLM"})
     $esxcli.storage.nmp.satp.rule.add.Invoke(@{vendor="HITACHI";
     model="^OPEN-*"; satp="HTI_SATP_HDLM"})
     $esxcli.storage.nmp.satp.rule.add.Invoke(@{vendor="HP";
     model="^OPEN-*"; satp="HTI_SATP_HDLM"})
     $esxcli.storage.nmp.satp.rule.add.Invoke(@{vendor="HPE";
     model="^OPEN-*"; satp="HTI_SATP_HDLM"})
     ```

7. Check the path configuration according to the procedure described in *Checking the path configuration on page 3-29*.
8. If you are managing HDLM by using Global Link Manager, set up the host and remote management client by following the procedure described in *Settings when managing HDLM by using Global Link Manager on page 3-23*.

When ESXi 7.x is used on the host (when vSphere Lifecycle Manager is used)

Register the HDLM add-ons in the vSphere Lifecycle Manager of the vCenter Server, and apply to each host

In addition, see the HDLM *Release Notes* beforehand to check add-on file names and plugin names.

The add-on file is stored in the following location on the remote management client:

```
HDLM-installation-folder\plugin
```

When ESXi 7.x is used on the host (when the VMware PowerCLI is used)

The VMware PowerCLI is used to install HDLM on a host. If the VMware PowerCLI is not installed on the remote management client, install it and confirm that it can be used to connect to the host before continuing.

In addition, see the HDLM *Release Notes* beforehand to check depot file names and plugin names.

1. Copy the depot files stored in the remote management client to a directory on the host.

   Depot files are stored in the following location on the remote management client.

   ```
   HDLM-installation-folder\plugin
   ```

2. Start the command prompt of Windows PowerShell on the remote management client, and then run the following command to connect to the ESXi host:

   ```
   Connect-VIServer -Server "host-name-or-IP-address" -User "user-name" -Password "password"
   $vmHost = Get-VMHost "host-name-or-IP-address"
   $esxcli = Get-EsxCli -VMHost $vmHost -V2
   ```

3. Change the host acceptance level.

   Execute the following command to check the current acceptance level of the host:

   ```
   $esxcli.software.acceptance.get.Invoke()
   ```

   Save the command output. You will need it if you remove HDLM in the future.

   After saving the command output, execute the following command to change the host acceptance level:

   ```
   $esxcli.software.acceptance.set.Invoke(@{level="PartnerSupported"
   ```

```
})
```

4. Install HDLM on the host.

   Execute the following command. In the `-d` parameter, specify the name of a depot file you copied in step 1.

   ```
   $esxcli.software.vib.install.Invoke(@{depot="/any-folder-on-the-host/depot-file-name"})
   ```

   When the installation process has completed, execute the following command and make sure that the plug-in version number matches that described in the HDLM Release Notes:

   ```
   $esxcli.software.vib.list.Invoke() | findstr hdlm
   ```

5. Restart the host.
6. Make sure that the SATP claim rule for HDLM has been applied.
   - Execute the following command, and make sure that the claim rule appears in the command output:

     ```
     Connect-VIServer -Server "host-name-or-IP-address" -User "user-name" -Password "password"
     $vmHost = Get-VMHost "host-name-or-IP-address"
     $esxcli = Get-EsxCli -VMHost $vmHost -V2
     $esxcli.storage.nmp.satp.rule.list.Invoke()
     ```

   - If the claim rule does not appear, execute the following commands and register the claim rule. After the registration, go back to step 5 and resume the operation.

     ```
     $esxcli.storage.nmp.satp.rule.add.Invoke(@{vendor="HITACHI"; model="^DF600F*"; satp="HTI_SATP_HDLM"})
     $esxcli.storage.nmp.satp.rule.add.Invoke(@{vendor="HITACHI"; model="^OPEN-*"; satp="HTI_SATP_HDLM"})
     $esxcli.storage.nmp.satp.rule.add.Invoke(@{vendor="HP"; model="^OPEN-*"; satp="HTI_SATP_HDLM"})
     $esxcli.storage.nmp.satp.rule.add.Invoke(@{vendor="HPE"; model="^OPEN-*"; satp="HTI_SATP_HDLM"})
     ```

7. Check the path configuration according to the procedure described in *Checking the path configuration on page 3-29*.
8. If you are managing HDLM by using Global Link Manager, set up the host and remote management client by following the procedure described in *Settings when managing HDLM by using Global Link Manager on page 3-23*.

Performing an upgrade installation of HDLM

The procedure for an upgrade installation of HDLM is the same as for a new installation.From the following, use the procedure that matches the installation destination:

You can use VMware vSphere Update Manager if ESXi 6.x is used on the host..

- Remote management client

  For details, see *New installation on remote management client on page 3-14*.

  However, the operations in step 2 and step 6 are not necessary.

- Host

  For details, see *New installation on host on page 3-17*.

  By using an HDLM offline bundle file as a VMware vSphere Update Manager patch, you can upgrade HDLM.

  When the VMware vSphere CLI is used, apply the offline bundle file to the host as a patch by using VMware vSphere Update Manager, and then perform the steps from step 5 to the end of the procedure described in *New installation on host on page 3-17* in "When ESXi 6.x is used on the host (when the VMware vSphere CLI is used)".

  When the VMware PowerCLI is used, apply the offline bundle file to the host as a patch by using VMware vSphere Update Manager, and then perform the steps from step 5 to the end of the procedure described in *New installation on host on page 3-17* in "When ESXi 6.x is used on the host (when the VMware PowerCLI is used).

Notes

- After performing an upgrade installation of HDLM on the host, restart the host. If you do not restart the host, the HDLM driver will not be updated and HDLM commands will not run correctly.
- If the utility for displaying the HDLM performance information (`dlmperfinfo`) is running, stop the `dlmperfinfo` utility by pressing **Ctrl+C**, and then perform an upgrade installation of HDLM on the remote management client.

Performing a re-installation of HDLM

Before you can re-install HDLM, you must remove the existing installation.

To re-install HDLM:

1. Prepare for HDLM removal by following the directions in *Preparations for HDLM removal on page 3-37*.
2. Remove HDLM from the host and remote management client by following the directions in *Removing HDLM on page 3-37*.
3. Install HDLM on the remote management client and the host by following the directions in *Performing a new installation of HDLM on page 3-13*.

Settings when managing HDLM by using Global Link Manager

When managing HDLM by using Global Link Manager, the following setup tasks need to be performed for the host and remote management client:

Host settings

- Create a user account.

Remote management client settings

- Add the host to the Credential Store file.
- Execute the utility for configuring HDLM remote management client environments (`dlmrmcenv`).
- Specify Windows Firewall settings.

Creating a user account

A user account used for performing operations on the host from the remote management client needs to be created on the host.

Use either of the choices below for the user account name. If you use `GLMUser`, you can omit the user account name when executing the `dlmrmcenv` utility.

- `GLMUser`
- Any user account name

Set the role of the created user account to `Administrator`.

If multiple hosts are being managed, create the same user account for all hosts.

For details on how to create a user account, see the manual for VMware vSphere.

Note

When managing HDLM by using Global Link Manager, the following restrictions apply:

- Only one user account can be used by one remote management client.

  If a host is managed by using multiple user accounts, you must prepare as many user accounts as the number of remote management clients.
- The configuration in which one host is managed from multiple management clients is not supported.

Adding the host to the Credential Store file

Add the IP address of the host# and the user account created on the host as described in *Creating a user account on page 3-24* to the Credential Store file.

#

Use the IP address to add the host.

In addition, if you add the host by specifying the host name from Global Link Manager, configure the settings so that the host name of the ESXi host on the remote management client can be resolved to the IP address.

When using VMware vSphere CLI

The Credential Store file stores the host information (host name, user name, and password) that is managed by VMware vSphere CLI.

The default storage location of the Credential Store is as follows:
`%APPDATA%\VMware\credstore\vicredentials.xml`

To add a host to the Credential Store file, execute the VMware vSphere CLI script (`credstore_admin.pl`).#

#

Use `credstore_admin.pl` of the VMware vSphere CLI to create a Credential Store file whose version is 1.0 or 1.1. If you create a Credential Store file whose version is not 1.0 or 1.1 by using a product other than the VMware vSphere CLI, such as the VMware PowerCLI, operations performed from Global Link Manager might fail.

To use the Credential Store file from a product other than the VMware vSphere CLI, create a Credential Store file for HDLM by using the VMware vSphere CLI script, and then specify the file for the `--credstore` parameter of the `dlmrmcenv` utility.

#

Use `credstore_admin.pl` to create a Credential Store file whose version is 1.0 or 1.1. If you create a Credential Store file whose version is not 1.0 or 1.1 by using a product other than the VMware vSphere CLI, operations performed from Global Link Manager might fail.

To use the Credential Store file from a product other than the VMware vSphere CLI, create a Credential Store file for HDLM by using the VMware vSphere CLI script, and then specify the file for the `--credstore` parameter of the `dlmrmcenv` utility.

When using VMware PowerCLI

The Credential Store file stores the host information (host name, user name, and password) that is managed by VMware PowerCLI.

To create the Credential Store file:

1. Start Windows PowerShell as a user with administrator privileges.
2. Copy the following file to any folder of your choice.#
   HDLM-installation-folder`\config\sample_add_dlmcredstore.ps1`
3. Use a text editor to open the copied file, and then enter the IP address, username, and password for the ESXi host, and the HDLM installation folder on the remote management client.

   Information to enter:

```
$Address="IP-address"
$User="username-of-the-ESXi-host"
$Password="password-for-the-ESXi-host"
$InstallFolder="HDLM-installation-folder"
```

4. Execute the `dlmcreatecredstore` utility.

   ```
   dlmcreatecredstore -f "file-that-you-copied"
   ```

   For details about the `dlmcreatecredstore` utility, see *The utility for creating HDLM Credential Store (dlmcreatecredstore) on page 7-7*.

5. Confirm that the KAPL20951-I message appears, indicating that the utility ended successfully.
6. Confirm that the following Credential Store file was created.
   `HDLM-installation-folder\config\vicredentials.xml`

#

The PowerShell script sample_add_dlmcredstore.ps1 is used to create a Credential Store file whose version is 2.0 by using New-VICredentialStoreItem. After you create the Credential Store file by using the `dlmcreatecredstore` utility, delete the copied file containing the entered password because it will no longer be used.

Executing the dlmrmcenv utility

The `dlmrmcenv` utility registers the user account created in *Creating a user account on page 3-24* into the remote management client.

For details on the `dlmrmcenv` utility, see *The dlmrmcenv utility for configuring HDLM remote management client environments on page 7-21*.

To execute the utility:

When using VMware vSphere CLI

1. Log on to Windows on the remote management client as a member of the Administrators group.
2. Start the VMware vSphere CLI.
3. From the VMware vSphere CLI, execute the `dlmrmcenv` utility.

   ```
   dlmrmcenv [--username "user-account-name"] [--credstore
   "Credential-Store-file-path"]
   ```

   If the name of the user account created in *Creating a user account on page 3-24* is `GLMUser`, you can omit the `--username` parameter.

   If the Credential Store file is stored in the default folder, you can omit the `--credstore` parameter.

4. Check that the KAPL20907-I message is displayed, indicating that the utility ended successfully.
5. Restart the services of the HDLM manager.

From **Control Panel**, choose **Administrative Tools** and then **Services** to open the Services window.

From the list of services, select **DLMManagerVM**. Then, from the **Action** menu, choose **Restart** to restart the service.

6. Restart the services of Hitachi Command Suite Common Agent Component.

   After executing the `hbsasrv` to stop the services, restart the services.

   For details about the `hbsasrv` command, see *Starting and stopping Hitachi Command Suite Common Agent Component* in the manual *Hitachi Global Link Manager Installation and Configuration Guide*.

When using VMware PowerCLI

1. Log on to Windows on the remote management client as a member of the Administrators group.
2. Start Windows PowerShell.
3. From Windows PowerShell, execute the `dlmrmcenv` utility.#

   ```
   dlmrmcenv [--username "user-account-name"]
   ```

   If the name of the user account created in *Creating a user account on page 3-24* is `GLMUser`, you can omit the `--username` parameter.
4. Check that the KAPL20907-I message is displayed, indicating that the utility ended successfully.
5. Restart the services of the HDLM manager.

   From **Control Panel**, choose **Administrative Tools** and then **Services** to open the Services window.

   From the list of services, select **DLMManagerVM**. Then, from the **Action** menu, choose **Restart** to restart the service.
6. Restart the services of Hitachi Command Suite Common Agent Component.

   After executing the `hbsasrv` to stop the services, restart the services.

   For details about the `hbsasrv` command, see *Starting and stopping Hitachi Command Suite Common Agent Component* in the manual *Hitachi Global Link Manager Installation and Configuration Guide*.

#

If you use VMware PowerCLI, you do not need to specify the Credential Store file created by using `dlmcreatecredstore` utility with the `--credstore` parameter specified.

Specify Windows Firewall settings

If a Windows Security Alert dialog box appeared when you installed HDLM and you chose Cancel, after installation you need to change some settings in order to link with Global Link Manager. In the Windows Defender Firewall Advanced settings, change the settings for Java(TM) Platform SE Binary actions from blocked to allowed.

If Windows Firewall is enabled on the remote management client, the following ports used by Hitachi Command Suite Common Agent Component must be registered in the Windows Firewall exceptions list:

- Port set for the `server.agent.port` property (default: 24041/tcp)
- Port set for the `server.http.port` property (default: 24042/tcp)
- Port set for the `server.http.localPort` property (default: 24043/tcp)

For details about the ports used by the Hitachi Command Suite Common Agent Component, see the manual *Hitachi Global Link Manager Installation and Configuration Guide*.

To add the ports to the exceptions list:

1. Launch the **Administrator: Command Prompt** window.
2. Execute the `firewall_setup` command.
3. Check the displayed message to make sure that the command was executed successfully.

   ```
   The command ended successfully.
   ```

firewall_setup command syntax

The `firewall_setup` command registers ports used by Hitachi Command Suite Common Agent Component into the exceptions list of Windows Firewall running on the remote management client.

The `firewall_setup` command is stored in the following location, depending on whether the Device Manager agent is installed.

- Device Manager agent is installed:

  program-installation-destination-drive`:\Program Files (x86)`[#]
  `\Hitachi\HDVM\HBaseAgent\bin\firewall_setup.bat`

- Device Manager agent is not installed:

  program-installation-destination-drive`:\Program Files (x86)`[#]`\HDVM`
  `\HBaseAgent\bin\firewall_setup.bat`

#

For Windows 8 (x86), `Program Files (x86)` is `Program Files`.

The following table describes the `firewall_setup` command syntax.

Table 3-5 firewall_setup command syntax

Item	Details
Synopsis	`firewall_setup {-set|-unset}`
Description	Registers the ports used by Hitachi Command Suite Common Agent Component into the Windows Firewall exceptions list.

Item	Details
	• Port set for the `server.agent.port` property (default: 24041/tcp) • Port set for the `server.http.port` property (default: 24042/tcp) • Port set for the `server.http.localPort` property (default: 24043/tcp) When executing the command, log on as a member of the Administrators group and execute the command from the **Administrator: Command Prompt** window.

Options	`-set`
	Adds firewall exceptions.
	`-unset`
	Removes firewall exceptions.

Note

The folder that stores the Hitachi Command Suite Common Agent Component commands is automatically added to the PATH environment variable of the remote management client. So, when executing the command, there is no need to move the current folder to the folder storing the command.

Checking the path configuration

HDLM functions, such as load balancing and failover, are only available for HDLM management-target *devices* that have more than one active path. After you install HDLM or change the hardware configuration, check the structure and statuses of the paths.

You can use the HDLM command's `view` operation from the remote management client to check path information.

The following describes how to check path information by using the `dlnkmgr` command's `view` operation. For details about the view operation, see *view (displays information) on page 6-24*.

1. Execute the following command:

```
dlnkmgr -s host-name -u user-name -p password view -path >
redirect-destination-file
```

2. Open *`redirect-destination-file`* and check the following:
   - Make sure that there is at least one LU being accessed by a path.
     A path can be identified by `PathName`. The LU that is accessed by a path can be identified by both `DskName` and `iLU`.
   - Make sure that all the paths are online.
     Make sure that `PathStatus` is `Online`. If a path is not online, `Reduced` will be displayed.

- Make sure that for each path the combination of the CHA port (`ChaPort`), through which multiple paths are accessing the same LU, and the HBA port (the host port number and bus number displayed in the `PathName` column) is different.

  The digits displayed on the left of PathName indicate a host port number. The numbers displayed between the period to the right of the host port number and the next period indicate a bus number.

Setting up HDLM

HDLM includes functions like the load balancing function, the audit logging function, etc. You can configure these functions by using the HDLM command's `set` operation from the remote management client. This section describes how to set up the HDLM functions.

Checking the current settings

Check the current settings by executing the following command to set the HDLM functionality by using the `dlnkmgr` command's `view` operation.

```
PROMPT>dlnkmgr -s host-name -u user-name -p password view -sys -sfunc
HDLM Version                    : x.x.x-xx
Service Pack Version            :
Load Balance                    : on(extended lio)
Intermittent Error Monitor      : off
Dynamic I/O Path Control        : off(10)
KAPL01001-I The HDLM command completed normally. Operation name =
view, completion time = yyyy/mm/dd hh:mm:ss
PROMPT>
```

To check the current audit log settings, execute the following command:

```
PROMPT>dlnkmgr -l view -sys -audlog
Audit Log                       : off
Audit Log Category              : -
KAPL01001-I The HDLM command completed normally. Operation name =
view, completion time = yyyy/mm/dd  hh:mm:ss
PROMPT>
```

Setting up the HDLM functions

The table below summarizes the functions that can be set in HDLM. For details about each function, see *Setting up load balancing on page 3-31* and subsequent sections.

Each function has a default value and a recommended value. If no function is set by the HDLM command's `set` operation, the default value is applied for each function. The recommended values are used as the guideline values when functions are configured.

Table 3-6 The recommended and default values of each function

Function	Default value	Recommended value
Load-balancing	The Extended Least I/Os algorithm is used.	The recommended algorithm depends on the operating environment.
Intermittent Error Monitor	`off`	`on`
Dynamic I/O path control#	off 10-minute check interval	off The recommended checking interval depends on the operating environment.
Collection of audit log data	off	The recommended value depends on the operating environment. Set `on`, if you want to collect audit log data.

#
This function is applied only when HUS100 series storage is used.

Setting up load balancing

You can select whether to enable load balancing.

The following is an example of using a command to set load balancing.

```
dlnkmgr -s host-name -u user-name -p password set -lb on -lbtype
exlio
```

If you want to change the load balancing algorithm, specify one of the following algorithm values after the `-lbtype` option:

- `exrr` for the Extended Round Robin algorithm
- `exlio` for the Extended Least I/Os algorithm
- `exlbk` for the Extended Least Blocks algorithm
- `vmwmru` for the Most Recently Used algorithm (VMware)
- `vmwrr` for the Round Robin algorithm (VMware)

Setting up intermittent error monitoring

To prevent I/O performance from dropping when an intermittent error occurs, we recommend that you enable intermittent error monitoring.

When intermittent error monitoring is enabled, you can specify, as intermittent error conditions, the error monitoring interval and the number of times that the error needs to occur. The default value for the intermittent error-monitoring interval is 30. The default value for the number of error occurrences is 3.

HDLM assumes that an intermittent error has occurred on a path if intermittent error monitoring is enabled and the specified error rate is reached. A path that is assumed to have an intermittent error is excluded from automatic failback. Each path is monitored.

To determine whether a path is invalid for an automatic failback, you can use the results of the `dlnkmgr` command's `view` operation.

The following is an example of using a command to enable intermittent error monitoring:

```
dlnkmgr -s host-name -u user-name -p password set -iem on -intvl 20 -
iemnum 2
```

To enable intermittent error monitoring, specify `on`. To disable intermittent error monitoring, specify `off`. When you specify `on`, you can use the `-intvl` and `-iemnum` parameters to specify intermittent error conditions (the conditions used by the system to determine whether an intermittent error is occurring). In the `-intvl` parameter, specify the monitoring interval for an intermittent error. In the `-iemnum` parameter, specify the number of times that the error is to occur. If these parameters are omitted and 3 or more errors occur within 30 minutes, HDLM assumes that an intermittent error is occurring.

Setting up dynamic I/O path control

To prevent degrading of I/O performance, this function dynamically switches the output controllers for HDLM, following the switching of controllers performed by the storage system.

The dynamic I/O path control function can be set for each storage system or LU. The checking interval for reviewing the switching status information can also be set in order to properly follow the switching of controllers performed by the storage system.

The following is an example of setting the dynamic I/O path control function:

```
dlnkmgr -s host-name -u user-name -p password set -dpc on -pathid
000001 -lu
dlnkmgr -s host-name -u user-name -p password set -dpcintvl 10
```

Specify "`on`" to enable the dynamic I/O path control function, or "`off`" to disable the function. For the `-pathid` parameter, specify an LU, or the ID of a path connected to the storage system. For the `-dpcintvl` parameter, specify the checking interval (in minutes) for reviewing the information about the switching of controllers performed by the storage system.

Setting up audit log data collection

If you want to collect audit log data, you must also specify the collection level for audit log data and the audit log categories.

The table below lists and describes the values for the audit log collection level setting. An audit log data collection level is a severity level. The default is `6`.

Table 3-7 Values indicating audit log data collection levels

Value (severity)	Explanation
0	Error-level audit log data is collected.
1	
2	
3	
4	Error-level and Warning-level audit log data is collected.
5	
6	Error-level, Warning-level, and Information-level audit log data is collected.
7	

The table below lists and describes the values for the audit log category setting.. The default is `all`.

Table 3-8 Values indicating audit log data categories

Value	Explanation
`ss`	Audit log events of the `StartStop` category are collected.
`a`	Audit log events of the `Authentication` category are collected.
`ca`	Audit log events of the `ConfigurationAccess` category are collected.
`all`	Audit log events of the `StartStop`, `Authentication`, and `ConfigurationAccess` categories are all collected.

This example shows how to enable the collection of audit log data:

```
dlnkmgr -l set -audlog on -audlv 6 -category all
```

Specify `on` if you want to collect audit log data, and `off` if you do not want to collect audit log data. If you specify `on`, you can use the `-audlv` parameter to specify the collection level for audit log data and the `-category` parameter to specify the audit log categories.

Checking the updated settings

This chapter describes steps involved in how to check the new settings by using the `dlnkmgr` command's `set` operation after the new settings are applied.

When you some these settings, you can display information about all of HDLM function settings. The following is an example of executing the command:

```
PROMPT>dlnkmgr -s host-name -u user-name -p password view -sys -sfunc
HDLM Version                    : x.x.x-xx
Service Pack Version            :
```

```
Load Balance                    : on(extended lio)
Intermittent Error Monitor      : on(2/20)
Dynamic I/O Path Control        : off(10)
KAPL01001-I The HDLM command completed normally. Operation name =
view, completion time = yyyy/mm/dd hh:mm:ss
PROMPT>
```

After you have set up the collection of audit log data, use the following command to make sure that the setting has been specified correctly:

```
PROMPT>dlnkmgr -l view -sys -audlog
Audit Log                       : on(6)
Audit Log Category              : all
KAPL01001-I The HDLM command completed normally. Operation name =
view, completion time = yyyy/mm/dd  hh:mm:ss
PROMPT>
```

Setting up integrated traces (excluding Windows 10)

When you use HDLM, the activity logs of the HDLM command are output to the integrated trace information file(*program-installation-destination-drive*:`\Program Files (x86)`#`\HITACHI\HNTRLib2\spool\hntr2`*n*`.log`(where *n* indicates a file number)) of the Hitachi Network Objectplaza Trace Library (HNTRLib2) installed on the remote management client.

#

For Windows 8 (x86), `Program Files (x86)` is `Program Files`.

If a lot of integrated trace information is output, the older information might end up getting deleted in a very short amount of time. Also, if a large amount of integrated trace information is suddenly all output at the same time, any integrated trace information that is overflowing the buffer might not be saved into the integrated trace files. To save as much information as possible, change the settings for Hitachi Network Objectplaza Trace Library, increasing the integrated trace file size and buffer size. Note that if the values are too large, it will place a heavy load on the system. When determining these values, be sure to consider these operational tradeoffs. In Windows 10, you do not need to change these settings because the operation log is output to the process-specific-trace information file.

The following table shows the default and recommended values for the integrated trace file settings.

Table 3-9 Default and recommended values for the integrated trace file settings

Setting	Default value	Recommended value
Integrated trace file size	256 (KB)	4096 (KB)
Number of integrated trace files	4	8

Setting		Default value	Recommended value
Buffer size per monitoring interval	Monitoring cycle	10 (seconds)	5 (seconds)
	Buffer size per monitoring interval	64 (KB)	256 (KB)
Number of messages to be output per monitoring interval	Monitoring cycle	0 (seconds)	0 (seconds)
	Number of messages to be output	0	0

If Hitachi Network Objectplaza Trace Library (HNTRLib2) is already installed, the existing settings will be inherited. If you change these settings, keep in mind that programs other than HDLM also use them. If an earlier Hitachi Network Objectplaza Trace Library (HNTRLib) is already installed, the settings will not be inherited.

To change the integrated trace file settings:

1. On the remote management client, double-click the following file in Explorer:

   `program-installation-destination-drive:\Program Files (x86)`[#]
   `\HITACHI\HNTRLib2\bin\hntr2utl2.exe`

   #
   For Windows 8 (x86), `Program Files (x86)` is `Program Files`.

   The following dialog box appears.

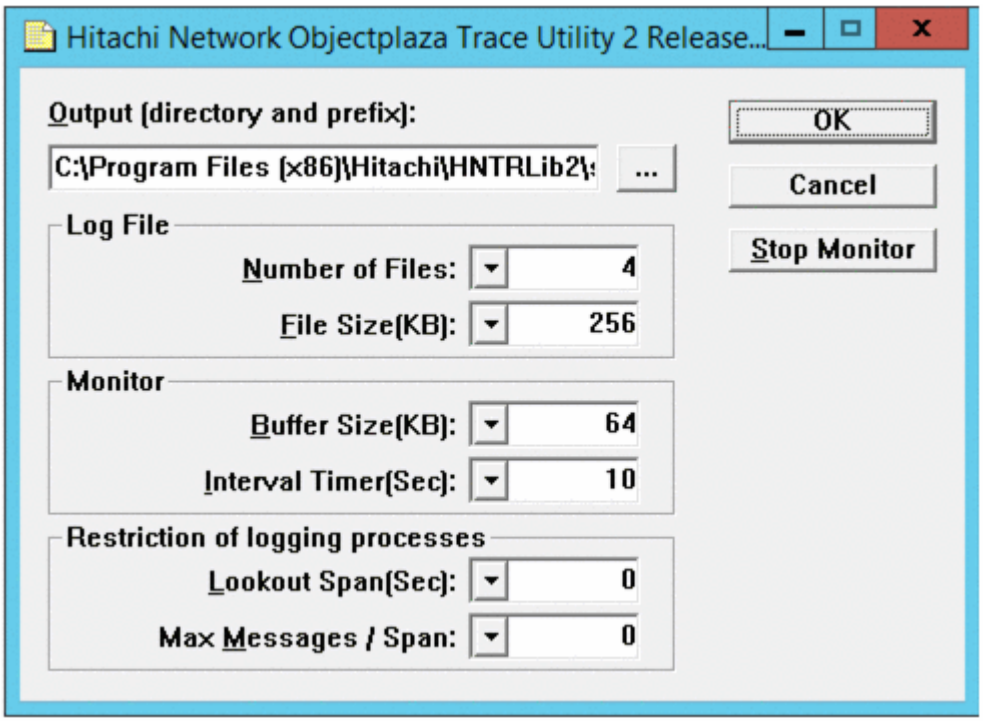

Figure 3-2 Hitachi Network Objectplaza Trace Utility 2 Release 2.0 dialog box.

2. In **Number of Files**, change the number of integrated trace files.
   The default is `4`. You can specify a value from 1 to 16.
   The value you specify here will apply to *n* in *program-installation-destination-drive*`:\Program Files (x86)\HITACHI\HNTRLib2\spool\Hntr2`*n*`.log` (*n* indicates a file number).
3. In **File Size(KB)**, change the size of an integrated trace file.
   The default is `256` (kilobytes). You can specify a value from 8 to 8192.
   Specify a value greater than or equal to the setting of **Buffer Size(KB)**.
4. In **Buffer Size(KB)**, change the buffer size.
   Change the buffer size for the monitoring cycle.
   The default is `64` (kilobytes). You can specify a value from 8 to 2048.
   Specify a value smaller than or equal to the setting of **File Size(KB)**.
5. In **Interval Timer(Sec)**, enter a value to shorten the monitoring cycle.
   The default is `10` (seconds). You can specify a value from 1 to 300.
6. In **Lookout Span(Sec)**, enter a value to specify the interval for monitoring the number of messages to be output to the integrated trace file.
   The default is `0` (seconds). You can specify a value from 0 to 3600.
   If you specify `0`, you cannot adjust the number of messages to be output because the system ignores the setting of **Max Messages / Span**.
7. In **Max Messages / Span**, enter a value to specify the maximum number of messages to be output to the integrated trace file at the monitoring interval specified in **Lookout Span(Sec)**.

The default is `0`. You can specify a value from 0 to 500.

If you specify `0`, you cannot adjust the number of messages to be output.

If you specify `0` for **Lookout Span(Sec),** you cannot adjust the number of messages to be output because the system ignores the **Max Messages / Span** setting.

8. After you finish changing the settings, click the **OK** button.

   The dialog box closes.

9. Close all of the Hitachi program products that are using Hitachi Network Objectplaza Trace Library, or restart the remote management client.

   If you choose to restart the remote management client, you do not need to perform step 10.

10. Restart the services of the HDLM manager and Hitachi Network Objectplaza Trace Library for the Hitachi Network Objectplaza Trace Library settings to take effect.

    From **Control Panel**, choose **Administrative Tools** and then **Services** to open the Services window.

    From the list of services, select **DLMManagerVM**. Then, from the **Action** menu, choose **Restart** to restart the service.

    Next, from the list of services, select **Hitachi Network Objectplaza Trace Monitor 2**. Then, from the **Action** menu, choose **Restart** to restart the service.

Removing HDLM

This section explains how to return the operating environment to the way it was before HDLM was installed.

Preparations for HDLM removal

- Back up all the data on the host where HDLM is installed. Also, if necessary, back up the data on the management target device.
- Shut down any application processes and services, such as DBMS, that use a path managed by HDLM.
- If firewall exceptions have been registered by using the `firewall_setup` command, remove them. Make sure that you do not use another Hitachi Command Suite product to manage the host after removing HDLM.

  For details about the `firewall_setup` command, see the description of `firewall_setup` syntax in *Specify Windows Firewall settings on page 3-27*.

Removing HDLM

The procedure for removing HDLM is described below. Perform the removal process on the host and the remote management client.

Removing HDLM from a host

When using VMware vSphere CLI

The removal of HDLM from a host is performed using the VMware vSphere CLI on the remote management client.

1. Log on to Windows on the remote management client as a member of the Administrators group.
2. Start the VMware vSphere CLI on the remote management client.
3. Execute the following command to check the name of the HDLM offline bundle file.

```
esxcli --server=host-name --username=user-name --
password=password software vib list | findstr hdlm
```

4. Remove HDLM.

   Execute the command below. In the `-n` parameter, specify the offline bundle file name you identified in step 3.

```
esxcli --server=host-name --username=user-name --
password=password software vib remove -n offline-bundle-file-name
```

5. Return the acceptance level of the host to what it was before you installed HDLM.

   Execute the command below. In the `--level` parameter, specify the acceptance level value that you noted before installing HDLM.

```
esxcli --server=host-name --username=user-name --
password=password software acceptance set --level=acceptance-
level
```

6. Restart the host.
7. Execute the following command to check the list of devices.

   Check the management-target devices of HDLM.

```
esxcli --server=host-name --username=user-name --
password=password storage nmp device list
                                        :
                                        :
naa.60060e8006cf2e000000cf2e00000039
   Device Display Name: HITACHI Fibre Channel Disk (naa.
60060e8006cf2e000000cf2e00000039)
   Storage Array Type: VMW_SATP_LOCAL
   Storage Array Type Device Config: {device config options }
   Path Selection Policy: VMW_PSP_MRU
   Path Selection Policy Device Config:
   Path Selection Policy Device Custom Config:
   Working Paths: vmhba2:C0:T0:L3
                                        :
                                        :
```

In the command output, search for items for which `HITACHI Fibre Channel Disk` appears in the `Device Display Name` field, and make sure that `HTI_SATP_HDLM` is not displayed in the `Storage Array Type` field for those items.

Having removed HDLM from the host, next remove it from the remote management client.

When using VMware PowerCLI

The removal of HDLM from a host is performed using the VMware PowerCLI on the remote management client.

1. Log on to Windows on the remote management client as a member of the Administrators group.
2. Start the command prompt of Windows PowerShell on the remote management client, and then run the following command to connect to the ESXi host:

```
Connect-VIServer -Server "host-name-or-IP-address" -User "user-name" -Password "password"
$vmHost = Get-VMHost "host-name-or-IP-address"
$esxcli = Get-EsxCli -VMHost $vmHost -V2
```

3. Execute the following command to check the name of the HDLM offline bundle file.

```
$esxcli.software.vib.list.Invoke() | findstr hdlm | findstr Name
```

4. Remove HDLM.
   Execute the command below. Specify the Vib name that you checked in step 3 for the `vibname` parameter.

```
$esxcli.software.vib.remove.Invoke(@{vibname="Vib-name"})
```

5. Return the acceptance level of the host to what it was before you installed HDLM.
   Execute the command below. In the `--level` parameter, specify the acceptance level value that you noted before installing HDLM.

```
$esxcli.software.acceptance.set.Invoke(@{level="acceptance-level"})
```

6. Restart the host.
7. Execute the following command to check the list of devices.
   Check the management-target devices of HDLM.

```
Connect-VIServer -Server "host-name-or-IP-address" -User "username" -Password "password"
$vmHost = Get-VMHost "host-name-or-IP-address"
$esxcli = Get-EsxCli -VMHost $vmHost -V2
```

```
$esxcli.storage.nmp.device.list.Invoke()
```

In the command output, search for items for which `HITACHI Fibre Channel Disk` appears in the `Device Display Name` field, and make sure that `HTI_SATP_HDLM` is not displayed in the `Storage Array Type` field for those items.

Having removed HDLM from the host, next remove it from the remote management client.

Removing HDLM from a remote management client

When removing HDLM from a remote management client, use the HDLM removal utility (`removehdlm`). HDLM cannot be removed by using Programs and Features in the Control Panel.

HDLM can be removed from a remote management client in an unattended removal operation. In an unattended removal, responses during processing can be omitted.

For details on the `removehdlm` utility, see *The removehdlm utility for removing HDLM on page 7-26*.

1. Launch the **Administrator: Command Prompt** window.
2. Execute the following command to start the `removehdlm` utility.

   ```
   removehdlm
   ```

   To perform an unattended removal, add the `-s` parameter to the `removehdlm` command.

   ```
   removehdlm -s
   ```

3. Check the removal results.
   Check the removal results from the command prompt. If an unattended removal was performed, also check the messages output to `hdlmvmuninst.log`.
   `hdlmvmuninst.log` is output directly under the drive on which Windows is installed.

Note

- When HDLM is removed, the Visual C++ 2015-2019 Redistributable Package that is provided with HDLM is not removed.
- If you changed the execution policy settings for Windows PowerShell at the time of installation, revert the policy to the state it was in before the change.
- If you changed the certificate check settings of the VMware PowerCLI at the time of installation, revert the settings to the state they were in before the change.

4

HDLM operation

This chapter describes the procedures for operating HDLM. This includes how to operate HDLM and the HDLM manager, and how to change the configuration of the operating environment.

HDLM operations using commands

This section explains how to use the HDLM command. For details on the various command operations, see *Chapter 6, Command reference on page 6-1*.

Notes on using commands

- Execute the HDLM command from the VMware vSphere CLI on the remote management client.
- To specify a parameter value containing one or more spaces, enclose the entire value in double quotation marks (").
- If you perform either of the following operations, the length of time required to perform the operation (*number-of-paths* x one second) depends on the number of paths that are managed by HDLM:
  - An `online` or `offline` operation to change the status of paths
  - A `set` operation to change the load-balance settings

Viewing path information

This section explains how to display path information by using an HDLM command.

To display path information, execute the `dlnkmgr` command's `view` operation with the `-path` parameter specified. The following example shows how to execute the command:

```
dlnkmgr -s host-name -u user-name -p password view -path
```

To display information only for the paths accessing the specified host device, execute the `dlnkmgr` command's `view` operation with the `-path` and `-hdev` parameters specified. The following example shows how to execute the command:

```
PROMPT>dlnkmgr -s host-name -u user-name -p password view -path -
hdev naa.60060e8012271b005040271b00001020
Paths:000002 OnlinePaths:000002
PathStatus   IO-Count    IO-Errors
Online       15          0

PathID PathName
DskName                                    iLU              ChaPort
Status     Type IO-Count   IO-Errors  DNum HDevName
000000 0004.0000.0000000000000000.0000 HITACHI .OPEN-V          .
410017           001020           1B      Online     Own
7          0    0 naa.60060e8012271b005040271b00001020
000003 0005.0000.0000000000000000.0000 HITACHI .OPEN-V          .
410017           001020           2B      Online     Own
8          0    0 naa.60060e8012271b005040271b00001020
KAPL01001-I The HDLM command completed normally. Operation name =
view(-vstv), completion time = yyyy/mm/dd hh:mm:ss
```

```
PROMPT>
```

For details on the displayed items and their descriptions, see *view (displays information) on page 6-24*.

Changing the status of paths

This section explains how to change path statuses.

Changing the status of paths to Online

To change the status of paths to online:

1. Check the current status of the paths.
   To place paths online by specifying a CHA port, single path, or HBA port WWN, check the path name or PATH_ID used to manage the path.
   The following example shows how to execute the command:

   ```
   dlnkmgr -s host-name -u user-name -p password view -path
   ```

2. To change the status of paths to `Online`, execute the `dlnkmgr` command's `online` operation.
   The paths to be placed `Online` can be specified by using a CHA port, single path, or HBA port WWN. For details on how to specify paths, see *online (places paths online) on page 6-10*.
   For example, to place a specific path online, execute the HDLM command's `online` operation with the `-pathid` parameter specified. The following is an example of executing the command:

   ```
   PROMPT>dlnkmgr -s host-name -u user-name -p password online -
   pathid 000001
   KAPL01050-I The currently selected paths will be changed to the
   Online status. Is this OK? [y/n]:y
   KAPL01061-I 1 path(s) were successfully placed Online; 0 path(s)
   were not. Operation name = online
   PROMPT>
   ```

3. Check to see if the statuses of all the applicable paths have changed.
   The following is an example of executing the command:

   ```
   dlnkmgr -s host-name -u user-name -p password view -path
   ```

Changing the status of paths to Offline(C)

1. Check the current status of the paths.
   To change the status of a path to `Offline(C)` by specifying a CHA port, single path, or HBA port WWN, check the path name or PATH_ID used to manage the path.
   The following is an example of executing the command:

```
dlnkmgr -s host-name -u user-name -p password view -path
```

2. To change the status of paths to `Offline(C)`, execute the `dlnkmgr` command's `offline` operation.

   The paths to be placed `Offline(C)` can be specified by using a CHA port, single path, or HBA port WWN. For details on how to specify paths, see *offline (places paths offline) on page 6-7*.

   For example, to place a specific path offline, execute the HDLM command's `offline` operation with the `-pathid` parameter specified. The following is an example of executing the command:

```
PROMPT>dlnkmgr -s host-name -u user-name -p password offline -
pathid 000001
KAPL01052-I The currently selected paths will be changed to the
Offline(C) status. Is this OK? [y/n]:y
KAPL01053-I If you are sure that there would be no problem when
the path is placed in the Offline(C) status, enter y. Otherwise,
enter n. [y/n]:y
KAPL01061-I 1 path(s) were successfully placed Offline(C); 0
path(s) were not. Operation name = offline
PROMPT>
```

3. Check to see if the statuses of all the applicable paths have changed.

   The following is an example of executing the command:

```
dlnkmgr -s host-name -u user-name -p password view -path
```

Viewing LU information

This section explains how to display LU information by using an HDLM command.

To display LU information, execute the `dlnkmgr` command's `view` operation with the `-lu` parameter specified. The following is an example of executing the command:

```
PROMPT>dlnkmgr -s host-name -u user-name -p password view -lu
Product       : VSP_Fx00
SerialNumber  : 410017
LUs           : 3

iLU    HDevName                              PathID Status
001020 naa.60060e8012271b005040271b00001020 000000 Online
                                            000003 Online
001021 naa.60060e8012271b005040271b00001021 000001 Online
                                            000004 Online
001022 naa.60060e8012271b005040271b00001022 000002 Online
                                            000005 Online
KAPL01001-I The HDLM command completed normally. Operation name =
view(-vstv), completion time = yyyy/mm/dd hh:mm:ss
PROMPT>
```

For details on the displayed items and their descriptions, see *view (displays information) on page 6-24*.

Initializing statistical information for paths

This section explains how to initialize statistical information (I/O counts and I/O errors) for all the paths managed by HDLM.

This procedure is useful when you want to check the number of I/O operations and I/O errors that have occurred since the last time the I/O counts and I/O errors were initialized to `0`.

1. Check the current status of the path.
   The following is an example of executing the command:

   ```
   dlnkmgr -s host-name -u user-name -p password view -path
   ```

2. To initialize statistical information for all the paths managed by HDLM, execute the `dlnkmgr` command's `clear` operation with the `-pdst` parameter specified.
   The following is an example of executing the command:

   ```
   PROMPT>dlnkmgr -s host-name -u user-name -p password clear -pdst
   KAPL01049-I Would you like to execute the operation? Operation
   name = clear [y/n]:y
   KAPL01001-I The HDLM command completed normally. Operation name
   = clear, completion time = yyyy/mm/dd hh:mm:ss
   PROMPT>
   ```

3. Check to see whether the statistical information for all the paths has been initialized.
   The following is an example of executing the command:

   ```
   dlnkmgr -s host-name -u user-name -p password view -path
   ```

Viewing and setting up the operating environment

This section explains how to display and set up the HDLM operating environment.

Viewing the operating environment

To display the operating environment, execute the `dlnkmgr` command's `view` operation with the `-sys` and `-sfunc` parameters specified.

The following is an example of executing the command:

```
PROMPT>dlnkmgr -s host-name -u user-name -p password view -sys -sfunc
HDLM Version                    : x.x.x-xx
Service Pack Version            :
Load Balance                    : on(extended lio)
Intermittent Error Monitor      : off
```

```
Dynamic I/O Path Control       : off(10)
KAPL01001-I The HDLM command completed normally. Operation name =
view, completion time = yyyy/mm/dd hh:mm:ss
PROMPT>
```

To display the operating environment of the audit log, execute the HDLM command's `view` operation with the `-sys` and `-audlog` parameters specified.

The following example shows how to execute the command:

```
PROMPT>dlnkmgr -l view -sys -audlog
Audit Log                      : off
Audit Log Category             : -
KAPL01001-I The HDLM command completed normally. Operation name =
view, completion time = yyyy/mm/dd hh:mm:ss
PROMPT>
```

For details on the displayed items and their descriptions, see *view (displays information) on page 6-24*.

Setting up the operating environment

To set up the HDLM operating environment, execute the `dlnkmgr` command's `set` operation. This operation allows you to set up the following functions:

- Load balancing
- Intermittent error monitoring
- Dynamic I/O path control
- Displaying the physical storage system information
- Audit log data collection
- Number of times the same path can be used for extended load balancing (sequential I/O)
- Number of times the same path can be used for extended load balancing (random I/O)

For details on how to set up each function, see *set (sets up the operating environment) on page 6-15*.

For example, to set up the load balancing function, execute the HDLM command's `set` operation with the `-lb` parameter specified. When the confirmation message is displayed, enter `y` to execute, or `n` to cancel the command.

The following is an example of executing the command:

```
PROMPT>dlnkmgr -s host-name -u user-name -p password set -lb on -
lbtype exrr
KAPL01049-I Would you like to execute the operation? Operation name
= set [y/n]: y
KAPL01001-I The HDLM command completed normally. Operation name =
set, completion time = yyyy/mm/dd hh:mm:ss
PROMPT>
```

To check whether the settings have been applied, see *Viewing the operating environment on page 4-5*.

Viewing license information

This section explains how to display license information.

To display license information, execute the `dlnkmgr` command's `view` operation with the `-sys` and `-lic` parameters specified.

The following is an example of executing the command:

```
PROMPT>dlnkmgr -l view -sys -lic
License Type Expiration
Permanent   -
KAPL01001-I The HDLM command completed normally. Operation name =
view, completion time = yyyy/mm/dd hh:mm:ss
PROMPT>
```

For details on the displayed items and their descriptions, see *view (displays information) on page 6-24*.

Updating the license

This section explains how to update the license.

To update the license, execute the `dlnkmgr` command's `set` operation with the `-lic` parameter specified. When the confirmation message is displayed, enter `y` to execute, or `n` to cancel the command. If the license key file does not exist, a message asking you to enter the license key appears, so enter the license key.

Note

When you are executing the `dlnkmgr` command's `set` operation with the `-lic` parameter to install the license, you can only execute it once at a time. If you attempt to execute more than one `dlnkmgr` command containing the `set` operation with the `-lic` parameter, the following message might appear and HDLM might terminate abnormally:

```
KAPL01075-E A fatal error occurred in HDLM. The system
environment is invalid.
```

If this message appears, execute the `dlnkmgr` command's `view` operation with the `-sys -lic` parameter to make sure that the license is installed correctly.

The following shows an example in which the command is executed:

```
PROMPT>dlnkmgr -l set -lic
KAPL01049-I Would you like to execute the operation? Operation name
= set [y/n]: y
KAPL01071-I A permanent license was installed.
```

```
PROMPT>
```

Viewing HDLM version information

This section explains how to display HDLM version information.

To display HDLM version information, execute the `dlnkmgr` command's `view` operation with the `-sys` parameter specified. The following is an example of executing the command:

To check the version of HDLM installed on a host:

```
PROMPT>dlnkmgr -s host-name -u user-name -p password view -sys
HDLM Version                    : x.x.x-xx
Service Pack Version            :
Load Balance                    : on(extended lio)
Intermittent Error Monitor      : off
Dynamic I/O Path Control        : off(10)
SATP                            : HTI_SATP_HDLM
Default PSP                     : HTI_PSP_HDLM_EXLIO
KAPL01001-I The HDLM command completed normally. Operation name =
view, completion time = yyyy/mm/dd hh:mm:ss
PROMPT>
```

To check the version of HDLM installed on a remote management client:

```
PROMPT>dlnkmgr -l view -sys
HDLM Version                   : x.x.x-xx
Service Pack Version           :
HDLM Manager Ver         WakeupTime
Alive        x.x.x-xx    yyyy/mm/dd  hh:mm:ss
License Type Expiration
Permanent    -
KAPL01001-I The HDLM command completed normally. Operation name =
view, completion time = yyyy/mm/dd hh:mm:ss
PROMPT>
```

The value displayed in `HDLM version` indicates the HDLM version.

Viewing HDLM component information

This section explains how to display HDLM component information.

To display HDLM component information, execute the `dlnkmgr` command's `view` operation with the `-sys` parameter specified. The following shows an example in which the command is executed:

```
PROMPT>dlnkmgr -l view -sys
HDLM Version                   : x.x.x-xx
Service Pack Version           :
HDLM Manager Ver         WakeupTime
```

```
Alive        x.x.x-xx    yyyy/mm/dd  hh:mm:ss
License Type Expiration
Permanent    -
KAPL01001-I The HDLM command completed normally. Operation name =
view, completion time = yyyy/mm/dd hh:mm:ss
PROMPT>
```

Among the displayed items, `HDLM Manager` indicate the HDLM component information.

Starting and stopping the HDLM manager

If an error occurs in the system, such as in an HDLM program, you might need to manually stop or start HDLM to recover from the error.

Starting the HDLM manager

During installation of the remote management client, the HDLM manager is registered as a Windows service and the startup type is set to **Automatic**. This means that when Windows starts, the HDLM manager will also start automatically.

If, for some reason, the HDLM manager does not automatically start, do the following:

Log on to Windows on the remote management client as a member of the Administrators group. From **Control Panel**, choose **Administrative Tools**, and then **Services**. From the list of services, double-click **DLMManagerVM**, and then click the **Start** button.

Use the following `dlnkmgr` command's `view` operation from the remote management client to confirm that the HDLM manager has started.

```
PROMPT>dlnkmgr -l view -sys -msrv
HDLM Manager Ver        WakeupTime
Alive        x.x.x-xx   yyyy/mm/dd hh:mm:ss
KAPL01001-I The HDLM command completed normally. Operation name =
view, completion time = yyyy/mm/dd hh:mm:ss
PROMPT>
```

When the `HDLM Manager` column shows `Alive`, the HDLM manager is active.

Stopping the HDLM manager

When you remove, upgrade, or re-install HDLM, the HDLM manager will automatically stop.

If, for some reason, the HDLM manager does not automatically stop, stop it as follows:

Log on to Windows on the remote management client as a member of the Administrators group. In **Control Panel**, choose **Administrative Tools**, and

then **Services**. From the list of services, double-click **DLMManagerVM**, and then click the **Stop** button.

Use the following `dlnkmgr` command's `view` operation from the remote management client to confirm that the HDLM manager has stopped.

```
PROMPT>dlnkmgr -l view -sys -msrv
HDLM Manager Ver      WakeupTime
Dead
KAPL01001-I The HDLM command completed normally. Operation name =
view, completion time = yyyy/mm/dd hh:mm:ss
PROMPT>
```

When the `HDLM Manager` column shows `Dead`, the HDLM manager is inactive.

HDLM resident processes

The table below lists and describes the resident processes in HDLM. To monitor these processes, use the names below.

Table 4-1 HDLM resident processes

Process	Service	Description
`dlmmgr.exe`	`HDLM Manager for VMware`	HDLM manager process
`hbsa_service.exe`	`HBsA Service`	Hitachi Command Suite Common Agent Component#1 process
`hntr2mon.exe`#2 `hntr2srv.exe`#2	`Hitachi Network Objectplaza Trace Monitor 2`	Hitachi Network Objectplaza Trace Library (HNTRLib2) process

#1

You only need to monitor this process when HDLM is linked to Global Link Manager.

#2

In Windows 10, monitoring is not required because HDLM does not use HNTRLib2.

HDLM and anti-virus software

HDLM does not include any file or folder that needs to be excluded from the targets of virus scans.

5

Troubleshooting

This chapter describes how to properly use HDLM error information, and then how to resolve the problem, if an error has occurred in HDLM. The resolutions for path errors, HDLM program errors, and other types of errors are all described separately. If you need technical support, see *Getting help on page xiii*.

Collecting error information

Collect the error information immediately after an error occurs. If the computer is restarted, the error information might be deleted and you will be unable to collect it.

For details about how to collect error information, see *Collecting error information on page 2-25*.

Checking error information in messages

You can check path errors by referring to the KAPL20023-E message output to the syslog.

To obtain detailed information about a path failure, check the execution results of the `view` operation as indicated by the error message.

For details on the `view` operation, see *view (displays information) on page 6-24*.

What to do for a path error

When a path error is detected, HDLM performs a failover on the path and outputs the KAPL20023-E message. This message indicates that an error has occurred in the components, shown in the following figure, that make up the path.

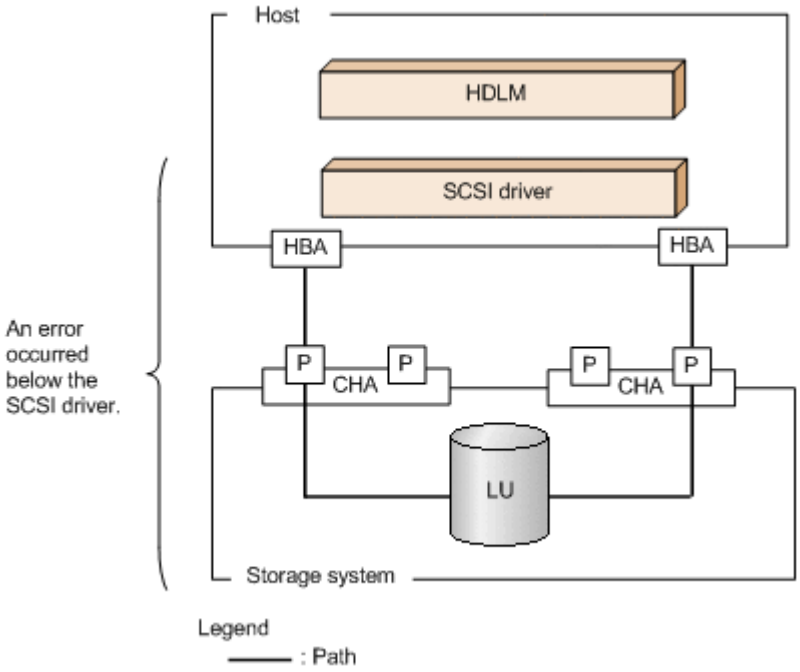

Figure 5-1 Error location when the KAPL20023-E message is output

The following figure shows the troubleshooting procedure when the KAPL20023-E message is output.

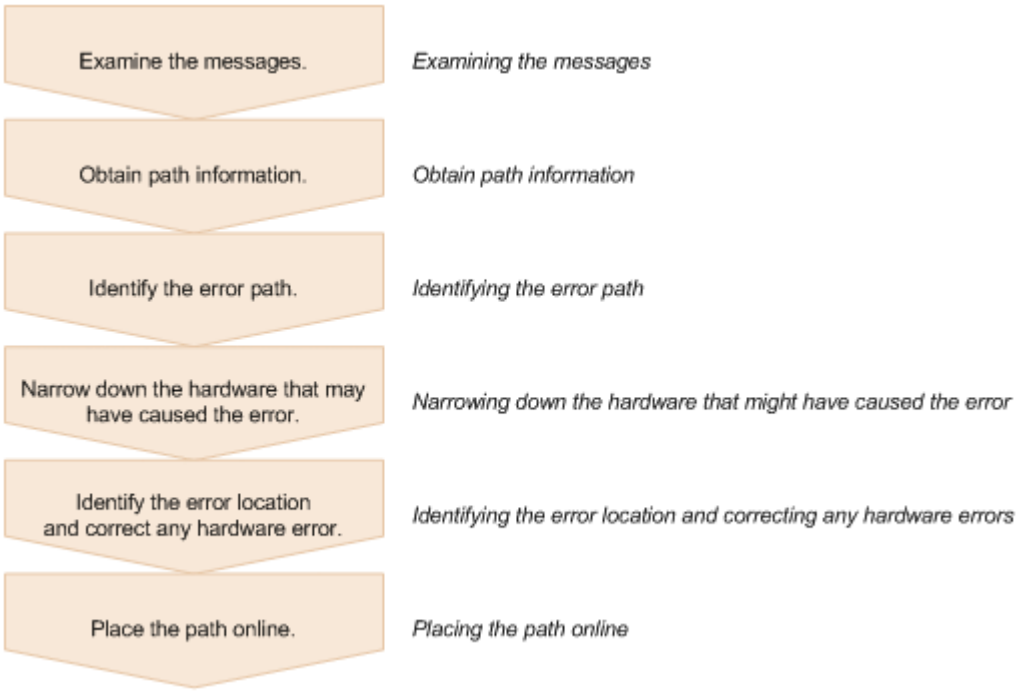

Figure 5-2 Troubleshooting procedure when a path error occurs

The following shows the procedure for using the HDLM command (`dlnkmgr`) to handle a path error.

Examining the messages

Examine the message that is output to syslog in the host by using applications or tools for monitoring messages. If the KAPL20023-E message is output, view the message to check the path in which the error has occurred. For details on each item displayed in messages, see *Checking error information in messages on page 5-2*.

Obtain path information

Obtain path information.

Execute the following command from the remote management client:

```
dlnkmgr -s host-name -u user-name -p password view -path -iem -
hbaportwwn > pathinfo.txt
```

`pathinfo.txt` is the redirection-output file name. Use a file name that matches your environment.

Identifying the error path

Check the obtained path information to find the path with the error. In the `Status` column, the error path has the status `Offline(E)`.

Narrowing down the hardware that might have caused the error

Check the `DskName`, `iLU`, `ChaPort`, and `HBAPortWWN` columns of the path with the error to narrow down the hardware that may be the cause of the error. To physically identify the hardware corresponding to `DskName`, `iLU`, and `ChaPort`, use the information provided by the storage-system management program.

Identifying the error location and correcting any hardware errors

Use the VMware vSphere and hardware management tools to identify the error location, and then resolve the problem. For hardware maintenance, contact your hardware vendor or maintenance company, if there is a maintenance contract.

Placing the path online

After the path has recovered from the error, use the `dlnkmgr` command's `online` operation to place the path back online. For details on the `online` operation, see *online (places paths online) on page 6-10*.

Execute the following command from the remote management client:

```
dlnkmgr -s host-name -u user-name -p password online
```

Executing this command places all the offline paths online.

If any path cannot be placed online due to an error, the KAPL01039-W message will appear. To ignore such paths and to continue processing, type `y`. Type `n` to cancel processing.

Check the statuses of the paths that cannot be placed online, and resolve the problem.

What to do for a program error

The following describes what to do to handle errors that occur in an HDLM program. The following figure shows the troubleshooting procedure.

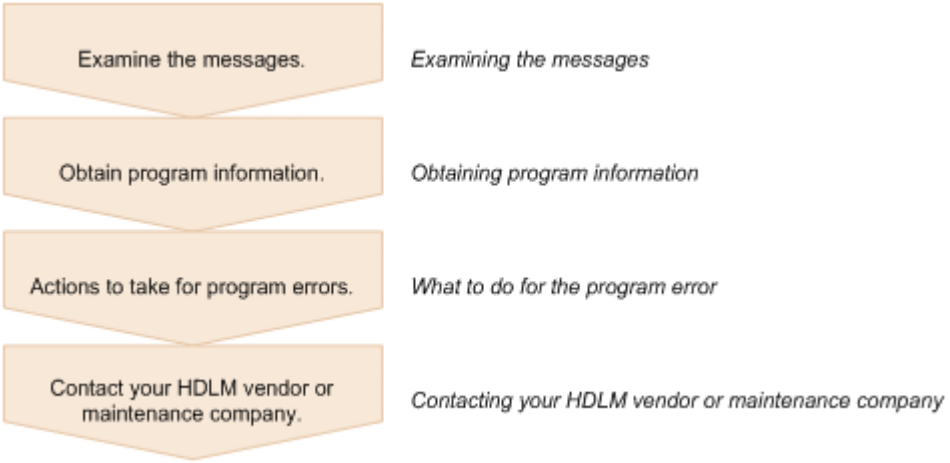

Figure 5-3 Troubleshooting procedure when a program error occurs

The following shows the procedure for handling a program error by using the HDLM command (`dlnkmgr`).

Examining the messages

Examine the messages that are output to the host syslog. If an error occurs in an HDLM program, a message is output to syslog. Examine the content of the message. Messages with error level `E` (Error) or higher require corrective action.

Obtaining program information

Obtain the information that you need to report to your HDLM vendor or maintenance company.

Use the `DLMgetras` utility to collect the error information. For details on this utility and the information it collects, see *The DLMgetras utility for collecting HDLM error information on page 7-2*.

Some of the information collected by the `DLMgetras` utility might be cleared when the host is restarted. Because of this, whenever an error occurs, execute the `DLMgetras` utility as soon as possible.

What to do for the program error

Follow the recommended actions for messages in *Chapter 8, Messages on page 8-1*.

If the error occurs again after you thought that you had resolved the problem, use the `dlnkmgr` command's `view` operation to check the status of the HDLM program, and then do whatever is necessary to resolve the problem. For details on the `view` operation, see *view (displays information) on page 6-24*.

Execute the following command from the remote management client:

```
dlnkmgr -s host-name -u user-name -p password view -sys
```

If the KAPL01013-E message is output after the command is executed, restart the host.

If the same error re-occurs after you thought you had resolved the problem, go to the subsection *Contacting your HDLM vendor or maintenance company on page 5-6*.

Contacting your HDLM vendor or maintenance company

If the error cannot be resolved, contact your HDLM vendor or maintenance company, and report the information that was collected by the `DLMgetras` utility.

What to do for other errors

When the cause of an error may be related to HDLM but is neither a path error nor an HDLM program error, execute the `DLMgetras` utility, and then report the collected information to the HDLM vendor or maintenance company if there is a maintenance contract for HDLM. For details about the `DLMgetras` utility and the information it collects, see *The DLMgetras utility for collecting HDLM error information on page 7-2*.

6

Command reference

This chapter describes the HDLM command (`dlnkmgr`) and its operations.

Overview of the HDLM command dlnkmgr

This section describes how to specify the HDLM command `dlnkmgr` and its subcommands (called *operations* in HDLM).

Command format

Enter the command using the following format:

```
dlnkmgr [connection-options] operation [parameter [parameter-value]]
```

`dlnkmgr`
: The command name.

`connection-options`
: The information required to log in to the target host.

`operation`
: The type of operation.

`parameter`
: A value required for an operation.

`parameter-value`
: A value required for an operation parameter.

Enter the host connection options in the following format:

```
-s host-name -u user-name -p password
```

`host-name`
: The name of the target host.

`user-name`
: The user name used to log in to the host.

`password`
: The password used to log in to the host.

If you omit the `-u` or `-p` parameter, the command will prompt you to enter a user name or password. In this case, enter the user name or password as directed.

Note that you do not need to specify host connection options if the following environment variables are set on the remote management client:

- `VI_SERVER`: Host name
- `VI_USERNAME`: User name
- `VI_PASSWORD`: Password

Operations of the dlnkmgr command

Table 6-1 Operations of the dlnkmgr command on page 6-3 shows the operations of `dlnkmgr` and their functions.

Table 6-1 Operations of the dlnkmgr command

Operation	Functions
`clear`	Initializes(0) the statistics (I/O count and I/O errors) of all paths managed by the HDLM system. For details, see *clear (returns the path statistics to the initial value) on page 6-3*.
`help`	Displays the format of the operations used for HDLM. For details, see *help (displays the operation format) on page 6-5*.
`offline`	Places offline an online path or paths. For details, see *offline (places paths offline) on page 6-7*.
`online`	Places online an offline path or paths. For details, see *online (places paths online) on page 6-10*.
`set`	Sets the HDLM operating environment. For details, see *set (sets up the operating environment) on page 6-15*.
`view`	Displays HDLM program information, path information, and LU information. For details, see *view (displays information) on page 6-24*.
`refresh`	Applies the storage system settings to HDLM. For details, see *refresh (applies storage system settings to HDLM) on page 6-59*.

Notes

- Execute the HDLM command from the VMware vSphere CLI on the remote management client.
- To specify a value that contains a space in its parameter, enclose the entire value in double quotes (").
- If you perform either of the following operations, the length of time required to perform the operation (*number-of-paths* x one second) depends on the number of paths that are managed by HDLM:
  - An `online` or `offline` operation to change the status of paths
  - A `set` operation to change the load-balance settings

clear (returns the path statistics to the initial value)

The `dlnkmgr` command's `clear` operation clears the statistics (I/O count and I/O errors) of all paths that are managed by HDLM, and returns them to their initial value.

Format

To set the path statistics to 0

```
dlnkmgr [-s host-name -u user-name -p password] clear
   -pdst [-s]
```

To display the format of the clear operation

```
dlnkmgr [-s host-name -u user-name -p password] clear
   -help
```

Parameters

To set the path statistics to 0

`-pdst`

Clears statistics (I/O count and I/O errors) of all paths managed by HDLM to the initial value (0).

Example

```
PROMPT>dlnkmgr clear -pdst
KAPL01049-I Would you like to execute the operation?
Operation name = clear [y/n]:y
KAPL01001-I The HDLM command completed normally. Operation
name = clear, completion time = yyyy/mm/dd hh:mm:ss
PROMPT>
```

`-s`

Executes the command without displaying a message asking for confirmation of command execution from the user. Specify this parameter if you want to skip the response to the confirmation message: for example, when you want to execute the command in a shell script or batch file.

Example

```
PROMPT>dlnkmgr clear -pdst -s
KAPL01001-I The HDLM command completed normally. Operation
name = clear, completion time = yyyy/mm/dd hh:mm:ss
PROMPT>
```

To display the format of the clear operation

`-help`

Displays the format of the `clear` operation.

Example

```
PROMPT>dlnkmgr clear -help
clear:
  Format
    dlnkmgr [Host-Connection-Options] clear -pdst [-s]
   Host-Connection-Options:
     [ -s SERVER      | --server=SERVER ]
     [ -u USERNAME    | --username=USERNAME ]
     [ -p PASSWORD    | --password=PASSWORD ]
KAPL01001-I The HDLM command completed normally. Operation
name = clear, completion time = yyyy/mm/dd hh:mm:ss
```

```
PROMPT>
```

help (displays the operation format)

The `dlnkmgr` command's `help` operation displays the list of operations available for the HDLM command, or the format of individual operations.

Format

```
dlnkmgr [-s host-name -u user-name -p password] help
   [operation] [operation] ...
```

Parameter

operation

Specify the HDLM command operation whose format you want to know. You can specify one of the following operations:

- `clear`
- `help`
- `offline`
- `online`
- `set`
- `view`
- `refresh`

If you do not specify any operations, the `help` operation displays all operations available for the HDLM command.

Examples

Example 1

The following example shows how to display all the operations available in the HDLM command.

```
PROMPT>dlnkmgr help
dlnkmgr:
  Format
    dlnkmgr [Host-Connection-Options]
            { clear | help | offline | online | set | view |
refresh }
    dlnkmgr -l { help | set | view }
   Host-Connection-Options:
     [ -s SERVER      | --server=SERVER ]
     [ -u USERNAME    | --username=USERNAME ]
     [ -p PASSWORD    | --password=PASSWORD ]
KAPL01001-I The HDLM command completed normally. Operation name
= help, completion time = yyyy/mm/dd hh:mm:ss
```

```
PROMPT>
```

Example 2

The following example shows how to display the formats of multiple operations.

```
PROMPT>dlnkmgr help online offline help
online:
  Format
    dlnkmgr [Host-Connection-Options] online [-path] [-s]
    dlnkmgr [Host-Connection-Options] online [-path]
                                -cha -pathid AutoPATH_ID [-s]
    dlnkmgr [Host-Connection-Options] online [-path] -pathid
AutoPATH_ID [-s]
    dlnkmgr [Host-Connection-Options] online [-path]
                                -hbaportwwn HBA_Port_WWN [-s]
    dlnkmgr [Host-Connection-Options] online [-path] -hapath [-
lu -pathid AutoPATH_ID] [-s]
    dlnkmgr [Host-Connection-Options] online [-path] -dfha [-lu -
pathid AutoPATH_ID] [-s]

   Host-Connection-Options:
     [ -s SERVER      | --server=SERVER ]
     [ -u USERNAME    | --username=USERNAME ]
     [ -p PASSWORD    | --password=PASSWORD ]

  Valid value
    AutoPATH_ID     { 000000 - 999999 }(Decimal)
offline:
  Format
    dlnkmgr [Host-Connection-Options] offline [-path]
                                 -cha -pathid AutoPATH_ID [-s]
    dlnkmgr [Host-Connection-Options] offline [-path] -pathid
AutoPATH_ID [-s]
    dlnkmgr [Host-Connection-Options] offline [-path]
                                 -hbaportwwn HBA_Port_WWN [-s]
   Host-Connection-Options:
     [ -s SERVER      | --server=SERVER ]
     [ -u USERNAME    | --username=USERNAME ]
     [ -p PASSWORD    | --password=PASSWORD ]

  Valid value
    AutoPATH_ID     { 000000 - 999999 }(Decimal)
help:
  Format
    dlnkmgr help { clear | offline | online | set | view |
refresh }
KAPL01001-I The HDLM command completed normally. Operation name
= help, completion time = yyyy/mm/dd hh:mm:ss
PROMPT>
```

Example 3

The following example shows how to display the operations that can be specified by the `help` operation

```
PROMPT>dlnkmgr help help
```

```
help:
  Format
    dlnkmgr help { clear | offline | online | set | view |
refresh }
KAPL01001-I The HDLM command completed normally. Operation name
= help, completion time = yyyy/mm/dd hh:mm:ss
PROMPT>
```

offline (places paths offline)

The `dlnkmgr` command's `offline` operation places online paths offline. Specify the paths to be placed offline by specifying a CHA port, single path, or HBA port WWN.

There must always be at least one online path accessing each LU.

Note that, for a path that is placed offline by the `offline` operation and whose status changes to Offline(C), the path status will not be inherited when the host is restarted. If the path is in a normal condition when the host is restarted, the path will become active and its status will be Online.

Placing too many paths offline might prevent paths from being able to switch if an error occurs. Before placing a path offline, use the `view` operation to check how many online paths remain. For details about the `view` operation, see *view (displays information) on page 6-24*.

Format

To place paths offline

```
dlnkmgr [-s host-name -u user-name -p password] offline
   [-path]
   |-cha -pathid AutoPATH_ID
   |-pathid AutoPATH_ID
   |-hbaportwwn HBA-port-WWN}
   [-s]
```

To display the format of the offline operation

```
dlnkmgr [-s host-name -u user-name -p password] offline
   -help
```

Parameters

To place paths offline

`-path`

Indicates that the target of the operation is a path managed by HDLM.

This parameter is optional because `offline` is always used for paths, so it is assumed.

Make sure that you specify the paths to be taken offline by using the `-cha`, `-pathid`, or `-hbaportwwn` parameter.

`-cha -pathid` *`AutoPATH_ID`*

Use this parameter to place offline, at one time, all the paths that pass through a specific CHA port. The command will place offline all the paths that pass through the CHA port to which the path with the specified *AutoPATH_ID* is connected. Paths that pass through a physical CHA port on a physical storage system will be offline.

Specify the current AutoPATH_ID of the target path, which is displayed by using the `view` operation. For details about the `view` operation, see *view (displays information) on page 6-24*. Leading zeros can be omitted (`000001` and `1` indicate the same *AutoPATH_ID*); however, when the target AutoPATH_ID is `000000`, enter `000000` or `0` for the parameter value.

AutoPATH_IDs are re-assigned every time the host is restarted. Always make sure that you use the `view` operation to find the current AutoPATH_ID of the target path, before executing the `offline` operation.

Example

The following example shows how to place offline all the paths connected to the CHA port `0A`. In this example, a path whose AutoPATH_ID is `000001` is connected to the target CHA port:

When the confirmation message is displayed, the user enters `y` to continue, or `n` to cancel the operation.

```
PROMPT>dlnkmgr offline -cha -pathid 000001
KAPL01055-I All the paths which pass the specified CHA port
will be changed to the Offline(C) status. Is this OK? [y/n]:y
KAPL01056-I If you are sure that there would be no problem
when all the paths which pass the specified CHA are placed in
the Offline(C) status, enter y.  Otherwise, enter n. [y/n]:
KAPL01061-I 2 path(s) were successfully placed Offline(C); 0
path(s) were not. Operation name = offline
PROMPT>
```

`-pathid` *`AutoPATH_ID`*

Use this parameter to place a single path offline.

Specify the current AutoPATH_ID of the target path, which is displayed by using the `view` operation. For details about the `view` operation, see *view (displays information) on page 6-24*. Leading zeros can be omitted (`000001` and `1` indicate the same *AutoPATH_ID*); however, when the target AutoPATH_ID is `000000`, enter `000000` or `0` for the parameter value.

AutoPATH_IDs are re-assigned every time the host is restarted. Always make sure that you use the `view` operation to find the current AutoPATH_ID of the target path, before executing the `offline` operation.

`-hbaportwwn` *`HBA-port-WWN`*

Use this parameter to place offline all the paths connected to an HBA port associated with a specific HBA port WWN. Only one set of values can be specified for the `-hbaportwwn` parameter.

For *HBA-port-WWN*, specify the value of `HBAPortWWN`. The parameter is not case sensitive.

To display `HBAPortWWN` and `PathName`, execute the `view` operation as follows:

```
dlnkmgr view -path -hbaportwwn
```

For details on how to execute the `view` operation and display the HBA port WWN and path name, see *To display path information on page 6-32*.

Example

The following shows an example of placing offline the paths for which the HBA port WWN is `10000000C93213BA` while confirming command operation.

```
PROMPT>dlnkmgr offline -path -hbaportwwn 10000000C93213BA
KAPL01052-I The currently selected paths will be changed to
the Offline(C) status. Is this OK? [y/n]: y
KAPL01053-I If you are sure that there would be no problem
when the path is placed in the Offline(C) status, enter y.
Otherwise, enter n. [y/n]: y
KAPL01061-I 1 path(s) were successfully placed Offline(C); 0
path(s) were not. Operation name = offline
PROMPT>
```

`-s`

Executes the command without displaying the message asking for confirmation of command execution from the user. Specify this parameter if you want to skip the response to the confirmation message: for example, when you want to execute the command in a shell script or batch file.

Example

The following example shows how to place a path, whose AutoPATH_ID is `000001`, offline without asking for confirmation of command execution from the user:

```
PROMPT>dlnkmgr offline -pathid 1 -s
KAPL01061-I 1 path(s) were successfully placed Offline(C); 0
path(s) were not. Operation name = offline
PROMPT>
```

To display the format of the offline operation

`-help`

Displays the format of the `offline` operation.

Example

The following example shows how to display the format of the `offline` operation:

```
PROMPT>dlnkmgr offline -help
offline:
  Format
    dlnkmgr [Host-Connection-Options] offline [-path]
                                -cha -pathid AutoPATH_ID [-s]
    dlnkmgr [Host-Connection-Options] offline [-path] -pathid
AutoPATH_ID [-s]
    dlnkmgr [Host-Connection-Options] offline [-path]
                                -hbaportwwn HBA_Port_WWN [-s]
   Host-Connection-Options:
     [ -s SERVER      | --server=SERVER ]
     [ -u USERNAME    | --username=USERNAME ]
     [ -p PASSWORD    | --password=PASSWORD ]

  Valid value
    AutoPATH_ID     { 000000 - 999999 }(Decimal)
KAPL01001-I The HDLM command completed normally. Operation
name = offline, completion time = yyyy/mm/dd hh:mm:ss
PROMPT>
```

Reference

Using the `view` operation together with standard OS commands enables you to filter the path information listed for a specific CHA port. For details about the `view` operation, see *view (displays information) on page 6-24*.

We recommend that you use the following command and verify the information on the target paths before you execute the `offline` operation to place offline all the paths connected to a specific CHA port.

Example

The following example shows how to filter and display the information on all the paths that pass through the CHA port `1B` of the VSP G1000 series:

```
dlnkmgr view -path -stname | find "VSP_G1000" | find "1B"
```

The above command will display information pertaining to only those paths that pass through the specified CHA port.

online (places paths online)

The `dlnkmgr` command's `online` operation places offline paths online. To specify the paths to be placed online, specify a CHA port, single path, or HBA port WWN.

Format

To place paths online

```
dlnkmgr [-s host-name -u user-name -p password] online
   [-path]
   |-cha -pathid AutoPATH_ID
   |-pathid AutoPATH_ID
   |-hbaportwwn HBA-port-WWN
   |-hapath [-lu -pathid AutoPATH_ID]
   |-dfha [-lu -pathid AutoPATH_ID]]
   [-s]
```

To display the format of the online operation

```
dlnkmgr [-s host-name -u user-name -p password] online
   -help
```

Parameters

To place paths online

`-path`

Indicates that the target of the operation is a path managed by HDLM.

This parameter is optional because `online` is always used for paths, so it is assumed.

Specify the paths to be taken online by using the `-cha`, `-pathid`, or `-hbaportwwn` parameter. If you do not specify any of these parameters, the command will place all the offline paths online. If there is a path that cannot be placed online, a message asks whether you would like to continue processing. To ignore the offline path that cannot be placed online and to continue processing, enter `y`. To stop the processing, enter `n`.

`-cha -pathid` *AutoPATH_ID*

Use this parameter to simultaneously place online all paths that pass through a specific CHA port. The command will place online all paths that pass through the CHA port in the path specified by the `-pathid` parameter. Paths that pass through a specific physical CHA port on a physical storage system will be online.

Specify the current AutoPATH_ID of the target path, which is displayed by using the `view` operation. For details about the `view` operation, see *view (displays information) on page 6-24*. Leading zeros can be omitted (`000001` and `1` indicate the same *AutoPATH_ID*); however, when the target AutoPATH_ID is `000000`, enter `000000` or `0` for the parameter value.

AutoPATH_IDs are re-assigned every time the host is restarted. Always make sure that you use the `view` operation to find the current AutoPATH_ID of the target path, before executing the `online` operation.

Example

The following example shows how to place online the paths connected to the CHA port `0A`. In this example, a path whose AutoPATH_ID is `000002` is connected to the target CHA port:

When the confirmation message is displayed, the user enters `y` to continue, or `n` to cancel the operation.

```
PROMPT>dlnkmgr online -cha -pathid 000002
KAPL01057-I All the paths which pass the specified CHA port
will be changed to the Online status. Is this OK? [y/n]:y
KAPL01061-I 2 path(s) were successfully placed Online; 0
path(s) were not. Operation name = online
PROMPT>
```

`-pathid` *`AutoPATH_ID`*

Use this parameter to place a single path online.

Specify the current AutoPATH_ID of the target path, which is displayed by using the `view` operation. For details about the `view` operation, see *view (displays information) on page 6-24*. Leading zeros can be omitted (`000001` and `1` indicate the same *AutoPATH_ID*); however, when the target AutoPATH_ID is `000000`, enter `000000` or `0` for the parameter value.

AutoPATH_IDs are re-assigned every time the host is restarted. Always make sure that you use the `view` operation to find the current AutoPATH_ID of the target path, before executing the `online` operation.

`-hbaportwwn` *`HBA-port-WWN`*

Use this parameter to place online all the paths connected to an HBA port associated with a specific HBA port WWN. Only one set of values can be specified for the `-hbaportwwn` parameter.

For *HBA-port-WWN*, specify the value of `HBAPortWWN`. The parameter is not case sensitive.

To display `HBAPortWWN` and `PathName`, execute the `view` operation as follows:

```
dlnkmgr view -path -hbaportwwn
```

For details on how to execute the `view` operation and display the HBA port WWN and path name, see *To display path information on page 6-32*.

Example

The following shows an example of placing online the paths for which the HBA port WWN is `10000000C93213BA` while confirming command operation.

```
PROMPT>dlnkmgr online -path -hbaportwwn 10000000C93213BA
KAPL01050-I The currently selected paths will be changed to
the Online status. Is this OK? [y/n]: y
KAPL01061-I 1 path(s) were successfully placed Online; 0
path(s) were not. Operation name = online
PROMPT>
```

`-hapath`

Use this parameter to change to the `Online` status when the paths to the primary volume (P-VOL) in an HAM environment are in the `Online(S)` or `Online(D)` status. To change the status of a specific LU, use the `-lu` and `-pathid` parameters to specify the path to the LU. To change the status of all the paths in the `Online(S)` and `Online(D)` statuses, specify only `-hapath`.

`-dfha`

Use this parameter to change the paths to the primary volume (P-VOL) in an HAM environment to `Online(D)`. The `Online(S)` status changes to the `Online(D)` status. When you do not specify this parameter, the status of the P-VOL paths in the HAM environment will be changed to the `Online(S)` status. If I/O operations to the secondary volume (S-VOL) have never occurred and only the paths to the P-VOL recover from an error, the path to the P-VOL will be in the `Online` status regardless of this parameter specification. To change the status of a specific LU, use the `-lu` and `-pathid` parameters to specify the path to the LU. To change the status of all the paths, specify only `-dfha`. A regular `online` operation is executed on the paths other than the P-VOL in an HAM environment.

`-lu -pathid AutoPATH_ID`

Specify management-target paths for each LU (P-VOL). The target LUs are the LUs that belong to a path ID that you specify in the `-pathid AutoPATH_ID` parameter.

`-s`

Executes the command without displaying the message asking for confirmation of command execution from the user. Specify this parameter if you want to skip the response to the confirmation message: for example, when you want to execute the command in a shell script or batch file.

Example

The following example shows how to place a path, whose AutoPATH_ID is `000002`, online without asking for confirmation of command execution from the user:

```
PROMPT>dlnkmgr online -pathid 2 -s
KAPL01061-I 1 path(s) were successfully placed Online; 0
path(s) were not. Operation name = online
PROMPT>
```

To display the format of the online operation

`-help`

Displays the format of the `online` operation.

Example

The following example shows how to display the format of the `online` operation:

```
PROMPT>dlnkmgr online -help
online:
  Format
    dlnkmgr [Host-Connection-Options] online [-path] [-s]
    dlnkmgr [Host-Connection-Options] online [-path]
                                -cha -pathid AutoPATH_ID [-s]
    dlnkmgr [Host-Connection-Options] online [-path] -pathid
AutoPATH_ID [-s]
    dlnkmgr [Host-Connection-Options] online [-path]
                                -hbaportwwn HBA_Port_WWN [-s]
    dlnkmgr [Host-Connection-Options] online [-path] -hapath
[-lu -pathid AutoPATH_ID] [-s]
    dlnkmgr [Host-Connection-Options] online [-path] -dfha [-
lu -pathid AutoPATH_ID] [-s]

   Host-Connection-Options:
     [ -s SERVER      | --server=SERVER ]
     [ -u USERNAME    | --username=USERNAME ]
     [ -p PASSWORD    | --password=PASSWORD ]

  Valid value
    AutoPATH_ID     { 000000 - 999999 }(Decimal)
KAPL01001-I The HDLM command completed normally. Operation
name = online, completion time = yyyy/mm/dd hh:mm:ss
PROMPT>
```

Reference

Using the `view` operation together with standard OS commands enables you to filter the path information listed for a specific CHA port. For details about the `view` operation, see *view (displays information) on page 6-24*.

We recommend that you use the following command and verify the information on the target paths before you execute the `online` operation to place online all the paths connected to a specific CHA port.

Example

The following example shows how to filter and display the information on all paths that pass through the CHA port `1B` of the VSP G1000 series:

```
dlnkmgr view -path -stname | find "VSP_G1000" | find "1B"
```

The above command will display information pertaining to only those paths that pass through the specified CHA port.

set (sets up the operating environment)

The `dlnkmgr` command's `set` operation sets the HDLM operating environment.

Format

To set the host operating environment

```
dlnkmgr [-s host-name -u user-name -p password] set
   {-lb on -lbtype {exrr|exlio|exlbk|vmwmru|vmwrr}
   |-iem {on [-intvl error-monitoring-interval] [-iemnum number-
   of-times-error-is-to-occur]|off}
   |-expathusetimes number-of-path-use-times
   |-exrndpathusetimes number-of-path-use-times
   |-dpc {on|off} [-pathid path-ID -lu|-pathid path-ID -storage]
   |-dpcintvl checking-interval
   }
   [-s]
```

To set the remote management client operating environment

```
dlnkmgr -l set
   {-lic
   |-audlog {on [-audlv audit-log-data-collection-level] [-
   category [[ss] [a] [ca] [all]]|off}
   |-pstv {on|off}
   }
   [-s]
```

To display the format of the set operation

To display the format of the operation for both a host and remote management client:

```
dlnkmgr set
   -help
```

To display the format of the operation for a host:

```
dlnkmgr -s host-name -u user-name -p password set
   -help
```

To display the format of the operation for a remote management client:

```
dlnkmgr -l set
   -help
```

Parameters

To set the host operating environment

The table below shows the defaults and recommended values for each setting. If you change the value of the `set` operation, the new value takes effect immediately.

Table 6-2 Default and recommended values

Item name	Default value	Recommended value
Load balancing	The Extended Least I/Os algorithm is used.	The recommended algorithm depends on the operating environment.
Intermittent error monitoring	`off`	`on`
Number of times the same path can be used for extended load balancing (sequential I/O)	`100`	The recommended value depends on the operating environment.
Number of times the same path can be used for extended load balancing (random I/O)	`1`	The recommended value depends on the operating environment.
Dynamic I/O path control#	off The checking interval is 10 minutes.	off The recommended checking interval depends on the operating environment.

#

This item is applied only when HUS100 series storage is used.

`-lb on -lbtype {exrr|exlio|exlbk|vmwmru|vmwrr}`

Specify the algorithm to be used for load balancing.

`exrr`: The Extended Round Robin algorithm

`exlio`: The Extended Least I/Os algorithm

`exlbk`: The Extended Least Blocks algorithm

`vmwmru`: The Most Recently Used algorithm (VMware)

`vmwrr`: The Round Robin algorithm (VMware)

`-iem {on [-intvl` *`error-monitoring-interval`*`] [-iemnum` *`number-of-times-error-is-to-occur`*`]|off}`

Enables or disables intermittent error monitoring.

`on`: Enabled

`off`: Disabled

To prevent I/O performance from dropping when an intermittent error occurs, we recommend that you enable intermittent error monitoring. If `on` is specified, in the subsequent parameters you can specify the intermittent error monitoring interval and the number of times that the error is to occur. If the specified number of times that the error is to occur is reached during the specified monitoring interval (in minutes) on a path, HDLM assumes that an intermittent error is occurring on the path. A path that is assumed to have an intermittent error is excluded from automatic failback. Intermittent error monitoring is performed on each path.

If you omit the intermittent error monitoring interval or the number of times that the error is to occur, each setting is specified as follows:

- When the intermittent error monitoring interval or the number of times that the error is to occur has not been specified before:

  The intermittent error monitoring interval is set to 30 minutes, and the number of times that the error is to occur is set to 3.
- When the intermittent error monitoring interval or the number of times that the error is to occur has been specified before:

  The values specified from the last time are used.

The following shows the sub-parameters that should be specified: the error monitoring interval and the number of times that the error is to occur:

`-intvl` *`error-monitoring-interval`*

Specify the monitoring interval for an intermittent error. Use a value from 1 to 1440 minutes. The default is `30`.

During intermittent error monitoring, if changes are made to the intermittent error monitoring interval setting, the number of errors counted on all paths until the changes are made, and the state of exclusion from automatic failback are initialized. Monitoring then restarts using the new settings.

The error monitoring interval specified in this parameter is stored even if specifying `-iem off` disables intermittent error monitoring. Therefore, when you re-enable intermittent error monitoring and an error monitoring interval is not specified, intermittent error monitoring will be started using the stored error monitoring interval.

`-iemnum` *`number-of-times-error-is-to-occur`*

Specify the number of times the error needs to occur for an intermittent error to be assumed. Valid values are from 1 to 99. The default is `3`.

During intermittent error monitoring, if changes are made to the setting for the number of times that an error is to occur, the number of errors counted on all paths until the changes are made, and the state of exclusion from automatic failback are initialized. Monitoring then restarts using the new settings.

The number of times that the error is to occur is stored in the system, even when `-iem off` is specified and intermittent error monitoring is disabled. Therefore, when you re-enable intermittent error monitoring

without specifying the number of times, intermittent error monitoring will be started using the value stored in the system.

When the `set -iem on` operation is executed during intermittent error monitoring, even if you do not change the error monitoring interval or the number of times that the error is to occur, the history of errors on all paths managed by HDLM, and the information of the paths excluded from automatic failback are initialized. Intermittent error monitoring continues.

`-expathusetimes` *number-of-path-use-times*

Specifies the number of times the same path can be used for sequential I/O operations when the extended Round Robin (`exrr`), Least I/Os (`exlio`), or Least Blocks (`exlbk`) algorithm is used for load balancing.

You an specify a decimal (base 10) value from `1` to `999999`. The default is `100`.

`-exrndpathusetimes` *number-of-path-use-times*

Specifies the number of times the same path can be used for random I/O operations when the extended Round Robin (`exrr`), Least I/Os (`exlio`), or Least Blocks (`exlbk`) algorithm is used for load balancing.

You an specify a decimal (base 10) value from `1` to `999999`. The default is `1`.

`-dpc {on|off} [-pathid` *path-ID* `-lu | -pathid` *path-ID* `-storage]`

Enables or disables the dynamic I/O path control function for each storage system or LU. The default value is "off".

`on`: Enabled

`off`: Disabled

`-pathid` *path-ID* `-lu`

Sets the dynamic I/O path control function to enabled or disabled for each LU. Specify one of the IDs of the paths connected to the target LU.

`-pathid` *path-ID* `-storage`

Sets the dynamic I/O path control function to enabled or disabled for each storage system. Specify one of the IDs of the paths connected to the target storage system.

If the `-pathid` parameter is not specified, the setting is performed for each system, and the setting for each storage system or LU is cleared.

Note

If the host is restarted, settings for the storage system or LU are cleared, and the host operates according to the system settings.

`-dpcintvl` *checking-interval*

Specifies the checking interval (in minutes) for reviewing information about switching of controllers performed by the storage system which is used in the dynamic I/O path control function. Specify a value in the range from 5 to 1440. The default value is "10".

`-s`

Executes the command without displaying the message asking for confirmation of command execution from the user. Specify this parameter if you want to skip the response to the confirmation message: for example, when you want to execute the command in a shell script or batch file.

To set the remote management client operating environment

`-lic`

Specify this option for when a license is updated. The HDLM license is provided via a license key or license key file. A license key file is a file that stores the HDLM license key.

If you use a license key file:

Store the license key file named `hdlm_license` directly under the Windows installation drive, and then execute the `set -lic` operation. A message confirming that the license key has been registered is displayed, depending on the license key type defined in the license key file. When a temporary license key or emergency license key has been registered, the expiration period is displayed (KAPL01071-I, KAPL01072-I).

If you do not use a license key file:

When the `set -lic` operation is executed, a message (KAPL01068-I) asking the user to enter a license key appears. Enter the license key. A message confirming that the license key has been registered is displayed, depending on the license key type described in the license key file. For a temporary license key or emergency license key, the expiration period is also displayed (KAPL01071-I, KAPL01072-I).

The following table lists and describes the license key types.

Table 6-3 License key types

Type	Description
Permanent license key	Permanent license keys are valid for using HDLM permanently.
Temporary license key#	Temporary license keys are used temporarily, for example, when a user needs to perform product evaluations. Temporary license keys are valid for 120 days after the installation. You cannot reuse a temporary license key.
Emergency license key	Emergency license keys are used temporarily, for example, when waiting for a permanent license key to be issued. Emergency license keys are valid for 30 days after they are entered. You cannot reuse an emergency license key.

#

A temporary license key cannot be installed by using the `dlnkmgr` command's `set` operation.

Example 1

The following example shows how to update the license key when the license key file exists:

```
PROMPT>dlnkmgr -l set -lic
KAPL01049-I Would you like to execute the operation?
Operation name = set [y/n]: y
KAPL01071-I A permanent license was installed.
PROMPT>
```

Example 2

The following example shows how to update the license key when the license key file does not exist:

```
PROMPT>dlnkmgr -l set -lic
KAPL01049-I Would you like to execute the operation?
Operation name = set [y/n]: y
KAPL01083-I There is no license key file. File name
=Windows-installation-destination-drive-name\hdlm_license
KAPL01068-I Enter a license key:*************
KAPL01071-I A permanent license was installed.
PROMPT>
```

`-audlog {on [-audlv audit-log-data-collection-level] [-category [[ss] [a] [ca]|all]]|off}`

Specifies whether to collect audit log data.

`on`: Audit Log data is collected.

`off`: Audit Log data is not collected.

`-audlv audit-log-data-collection-level`

Specifies the severity level of audit log data to be collected. The table below lists and describes the values used for this setting. The default is `6`.

Table 6-4 Values indicating audit log data collection levels

Value (severity)	Explanation
0	Error-level audit log data is collected.
1	
2	
3	
4	Error-level and Warning-level audit log data is collected.
5	
6	Error-level, Warning-level, and Information-level audit log data is collected.
7	

`-category [[ss] [a] [ca]|all]`

Specifies the categories of audit log data to be collected. The table below lists and describes the values used for this setting. The default is `all`. If you specify the `-category` parameter without specifying a value, `all` is assumed.

Table 6-5 Values indicating audit log data categories

Value	Explanation
`ss`	Audit log events of the `StartStop` category are collected.
`a`	Audit log events of the `Authentication` category are collected.
`ca`	Audit log events of the `ConfigurationAccess` category are collected.
`all`	Audit log events of the `StartStop`, `Authentication`, and `ConfigurationAccess` categories are collected.

`-pstv {on|off}`

Enables or disables the display of the physical storage system information. The default value is "off".

`on`: Enabled

`off`: Disabled

If the display of the physical storage system information is enabled, information about the physical storage system is displayed. If the display of the physical storage system information is disabled, information about the storage system recognized by the operating system is displayed. For a virtualized storage system, virtual information is displayed, and for a non-virtualized storage system, physical information is displayed.

The display results of view operations depend on whether the display of the physical storage system information is enabled or disabled. The following table shows the display items for which the display results differ.

Table 6-6 Display items for which the display results of the view operation differ depending on the -pstv parameter specification

Operation	Display item
`view -path`	DskName
	iLU
	ChaPort (CP)
`view -lu`	Product
	SerialNumber (S/N)
	iLU

Operation	Display item
	ChaPort

To display the format of the set operation

`-help`

Displays the format of the `set` operation.

Examples

Example 1

The following example displays the format of the operation for both a host and remote management client:

```
PROMPT>dlnkmgr set -help
set:
  Format
    dlnkmgr [Host-Connection-Options] set
            { -lb on -lbtype { exrr | exlio | exlbk | vmwmru |
vmwrr }
            | -iem  on [ -intvl Error-Monitor-Interval ]
                       [ -iemnum Number-Of-Times ]
            | -iem  off
            | -expathusetimes Number-Of-ExPathUseTimes
            | -exrndpathusetimes Number-Of-ExRndPathUseTimes
            | -dpc { on | off } [-pathid AutoPATH_ID { -lu | -
storage } ]
            | -dpcintvl Dpc-Interval
            }
            [-s]
    dlnkmgr -l set { -lic
                   | -audlog on [ -audlv AudlogLevel ]
                                [ -category Category-Value ]
                   | -audlog off
                   | -pstv { on | off }
                   }
                   [-s]
   Host-Connection-Options:
     [ -s SERVER      | --server=SERVER ]
     [ -u USERNAME    | --username=USERNAME ]
     [ -p PASSWORD    | --password=PASSWORD ]

  Valid value
    Error-Monitor-Interval      { 1 - 1440 }(Minutes) (Default Value
30)
    Number-Of-Times             { 1 - 99 }(Times)     (Default Value
3)
    Number-Of-ExPathUseTimes    { 1 - 999999 }(Times) (Default Value
100)
    Number-Of-ExRndPathUseTimes { 1 - 999999 }(Times) (Default Value
1)
```

```
    AutoPATH_ID                 { 000000 - 999999 }(Decimal)
    Dpc-Interval                { 5 - 1440 }(Minute)  (Default Value
10)
    AudlogLevel                 { 0 - 7 }             (Default Value
6)
    Category-Value              { [ss] [a] [ca] |
                                                 all } (Default Value
all)
KAPL01001-I The HDLM command completed normally. Operation name =
set, completion time = yyyy/mm/dd hh:mm:ss
PROMPT>
```

Example 2

The following example displays the format of the operation for a host:

```
PROMPT>dlnkmgr -s host-name -u user-name -p password set -help
set:
  Format
    dlnkmgr [Host-Connection-Options] set
            { -lb on -lbtype { exrr | exlio | exlbk | vmwmru |
vmwrr }
            | -iem  on [ -intvl Error-Monitor-Interval ]
                       [ -iemnum Number-Of-Times ]
            | -iem  off
            | -expathusetimes Number-Of-ExPathUseTimes
            | -exrndpathusetimes Number-Of-ExRndPathUseTimes
            | -dpc { on | off } [-pathid AutoPATH_ID { -lu | -
storage } ]
            | -dpcintvl Dpc-Interval
            }
            [-s]
   Host-Connection-Options:
     [ -s SERVER      | --server=SERVER ]
     [ -u USERNAME    | --username=USERNAME ]
     [ -p PASSWORD    | --password=PASSWORD ]

  Valid value
    Error-Monitor-Interval      { 1 - 1440 }(Minutes) (Default Value
30)
    Number-Of-Times             { 1 - 99 }(Times)     (Default Value
3)
    Number-Of-ExPathUseTimes    { 1 - 999999 }(Times) (Default Value
100)
    Number-Of-ExRndPathUseTimes { 1 - 999999 }(Times) (Default Value
1)
    AutoPATH_ID                 { 000000 - 999999 }(Decimal)
    Dpc-Interval                { 5 - 1440 }(Minute)  (Default Value
10)
KAPL01001-I The HDLM command completed normally. Operation name =
set, completion time = yyyy/mm/dd hh:mm:ss
PROMPT>
```

Example 3

The following example displays the format of the operation for a remote management client:

```
PROMPT>dlnkmgr -l set -help
set:
  Format
    dlnkmgr -l set { -lic
                   | -audlog on [ -audlv AudlogLevel ]
                                [ -category Category-Value ]
                   | -audlog off
                   }
                   [-s]
  Valid value
    AudlogLevel              { 0 - 7 }             (Default Value 6)
    Category-Value           { [ss] [a] [ca] |
                                                all } (Default Value
all)
KAPL01001-I The HDLM command completed normally. Operation name =
set, completion time = yyyy/mm/dd hh:mm:ss
PROMPT>
```

view (displays information)

The `dlnkmgr` command's `view` operation displays HDLM program information, path information, and LU information.

Format

To display program information for a host

```
dlnkmgr [-s host-name -u user-name -p password] view -sys
    [-sfunc|-satp|-rule|-expathusetimes|-exrndpathusetimes]
    [-t]
```

To display program information for a remote management client

```
dlnkmgr -l view -sys
    [-msrv|-lic|-audlog|-pstv]
    [-t]
```

To display path information

To display path information

```
dlnkmgr [-s host-name -u user-name -p password] view -path
    [-pstv|-vstv]
    [-hdev host-device-name]
    [-stname]
```

```
[-iem]
[-srt {pn|lu|cp}]
[-hbaportwwn]
[-vmruntimename]
[-vmstate]
[-t]
```

To display path information (by selecting a display item)

```
dlnkmgr [-s host-name -u user-name -p password] view -path -item
   [pn] [hbaportwwn] [dn] [lu] [cp] [type] [ic] [ie] [dnu] [hd]
   [iep]
   [vmruntimename] [vmstate] [vmpathuid] [phys] [virt] [vid] [ha]
   [-pstv|-vstv]
   [-hdev host-device-name]
   [-stname]
   [-srt {pn|lu|cp}]
   [-t]
```

To display path information (by abbreviating the list items)

```
dlnkmgr [-s host-name -u user-name -p password] view -path -c
   [-pstv|-vstv]
   [-stname]
   [-srt {lu|cp}]
   [-t]
```

To display LU information

To display LU information

```
dlnkmgr [-s host-name -u user-name -p password] view -lu
   [-pstv|-vstv]
   [-hdev host-device-name|-pathid AutoPATH_ID]
   [-t]
```

To display LU information (by selecting items to be displayed)

```
dlnkmgr [-s host-name -u user-name -p password] view -lu -item
   [ [slpr] [pn] [cp] [clpr] [type] [ic] [ie] [dnu] [iep] [dpc]
   [lb] [vmpsp] [vmruntimename] [vmstate] [phys] [virt] [vid]
   [ha] [hastat] |all]
   [-pstv|-vstv]
   [-hdev host-device-name|-pathid AutoPATH_ID]
   [-t]
```

To display a summary of LU information

```
dlnkmgr [-s host-name -u user-name -p password] view -lu -c
   [-pstv|-vstv]
   [-t]
```

To display the format of the view operation

To display the format of the operation for both a host and remote management client:

```
dlnkmgr view
   -help
```

To display the format of the operation for a host:

```
dlnkmgr -s host-name -u user-name -p password view
   -help
```

To display the format of the operation for a remote management client:

```
dlnkmgr -l view
   -help
```

Parameters (to display program information)

This section describes the parameters for the `view` operation, in the following order:

To display program information for hosts on page 6-26

To display program information for a remote management client on page 6-30

To display path information on page 6-32

To display LU information on page 6-46

To display the format of the view operation on page 6-58

To display program information for hosts

`-sys [-sfunc|-expathusetimes|-exrndpathusetimes|-satp|-rule]`

Displays program information for HDLM installed on a host.

Use one of the sub-parameters (following `-sys`) to specify the program information that you want to display. If you do not specify a sub-parameter, the command displays all of the program information except the number of times the same path can be used for load balancing, the number of times the same path can be used for extended load balancing, and the SATP claim rules. *Table 6-7 Items of program information (for hosts) on page 6-27* shows the parameters you can specify and the displayed information.

`-t`

Does not display the title for each information item.

Table 6-7 Items of program information (for hosts)

Parameter and program information to be displayed	Item	Description
`-sfunc` Information about the HDLM function settings	`HDLM Version`	Version number of HDLM that is running. For details about the version number that is displayed, see the HDLM Release Notes.
	`Service Pack Version`	HDLM SP version number. This item is blank if no SP is present.
	`Load Balance`	Settings for load balancing • Setting status: `on`: Enabled • Algorithm: One of the following load balancing algorithms is displayed in the parentheses following `on`. `extended rr`: The Extended Round Robin algorithm `extended lio`: The Extended Least I/Os algorithm `extended lbk`: The Extended Least Blocks algorithm `vmw mru`: The Most Recently Used algorithm (VMware) `vmw rr`: The Round Robin algorithm (VMware)
	`Intermittent Error Monitor`	• Setting for intermittent error monitoring: `on`: Enabled `off`: Disabled • Intermittent error monitoring interval and number of times that the error needs to occur When intermittent error monitoring is on, the specified intermittent error monitoring interval and number of times that the error needs to occur are displayed within the parentheses following `on`. The format is *number-of-times-error-is-to-occur*/*monitoring-interval*. The time is in minutes.
	`Dynamic I/O Path Control`	Setting status of the dynamic I/O path control function • Setting status `on`: Enabled

Parameter and program information to be displayed	Item	Description
		`off`: Disabled • Checking interval The parentheses following the setting status shows the checking interval for reviewing information about the switching of controllers performed by the storage system. "Minute" is used as the unit. If different settings have been specified for each storage system or LU, `*` is added after the parentheses in which the checking interval is displayed.
`-expathusetimes` The number of times the same path can be used for extended load balancing (sequential I/O)	`Times Same ExPath Was Used`	The number of times the same path can be used for sequential I/O operations when the extended Round Robin (`exrr`), Least I/Os (`exlio`), or Least Blocks (`exlbk`) algorithm is used for load balancing.
`-exrndpathusetimes` The number of times the same path can be used for extended load balancing (random I/O)	`Times Same ExPath Was Used(R)`	The number of times the same path can be used for random I/O operations when the extended Round Robin (`exrr`), Least I/Os (`exlio`), or Least Blocks (`exlbk`) algorithm is used for load balancing.
`-satp` Information about SATP	`SATP`	Displays HTI_SATP_HDLM.
	`Default PSP`	The default PSP of HTI_SATP_HDLM. • `HTI_PSP_HDLM_EXRR`: The Extended Round Robin algorithm • `HTI_PSP_HDLM_EXLIO`: The Extended Least I/Os algorithm • `HTI_PSP_HDLM_EXLBK`: The Extended Least Blocks algorithm • `VMW_PSP_MRU`: The Most Recently Used algorithm (VMware) • `VMW_PSP_RR`: The Round Robin algorithm
`-rule` SATP claim rules	`Vendor`	The storage system vendor ID in the SATP claim rule registered in HTI_SATP_HDLM.
	`Model`	The storage system model ID in the SATP claim rule registered in HTI_SATP_HDLM.

Examples

Example 1

The following example displays configuration information for HDLM functions on a host:

```
PROMPT>dlnkmgr view -sys -sfunc
HDLM Version                    : x.x.x-xx
Service Pack Version            :
Load Balance                    : on(extended lio)
Intermittent Error Monitor      : off
Dynamic I/O Path Control        : off(10)
KAPL01001-I The HDLM command completed normally. Operation name
= view, completion time = yyyy/mm/dd hh:mm:ss
PROMPT>
```

Example 2

The following example shows how to display the number of times the same path can be used for extended load balancing (sequential I/O):

```
PROMPT>dlnkmgr view -sys -expathusetimes
Times Same ExPath Was Used    : 100
KAPL01001-I The HDLM command completed normally. Operation name
= view, completion time = yyyy/mm/dd hh:mm:ss
PROMPT>
```

Example 3

The following example shows how to display the number of times the same path can be used for extended load balancing (random I/O):

```
PROMPT>dlnkmgr view -sys -expathusetimes
Times Same ExPath Was Used(R): 1
KAPL01001-I The HDLM command completed normally. Operation name
= view, completion time = yyyy/mm/dd hh:mm:ss
PROMPT>
```

Example 4

The following example displays SATP information:

```
PROMPT>dlnkmgr view -sys -satp
SATP                          : HTI_SATP_HDLM
Default PSP                   : HTI_PSP_HDLM_EXLIO
KAPL01001-I The HDLM command completed normally. Operation name
= view, completion time = yyyy/mm/dd hh:mm:ss
PROMPT>
```

Example 5

The following example displays SATP claim rules:

```
PROMPT>dlnkmgr view -sys -rule
Vendor   Model
HITACHI  DF600F
HITACHI  ^OPEN-*
```

```
HP        ^OPEN-*
KAPL01001-I The HDLM command completed normally. Operation name
= view, completion time = yyyy/mm/dd hh:mm:ss
PROMPT>
```

To display program information for a remote management client

`-sys [-msrv|-lic|-audlog|-pstv]`

Displays program information for HDLM installed on a remote management client.

Use one of the sub-parameters (following `-sys`) to specify the program information that you want to display. If you do not specify any sub-parameters, the command displays the version and license information for HDLM on the remote management client. *Table 6-8 Items of program information (for remote management clients) on page 6-30* shows the parameters you can specify and the displayed information.

`-t`

Does not display the title for each information item.

Table 6-8 Items of program information (for remote management clients)

Parameter and program information to be displayed	Item	Description
`-msrv` Information about the HDLM manager	`HDLM Manager`	Status of the HDLM manager: • `Alive`: Normal • `Dead`: Stopped
	`Ver`	Version number of the HDLM manager
	`WakeupTime`	Startup time of the HDLM manager
`-lic` Information about the HDLM license	`License Type`	License type • `Permanent` • `Temporary` • `Emergency`
	`Expiration`	License expiration: When using a permanent license: - When using a temporary license or emergency license: The license expiration period is displayed in the format: *yyyy/mm/dd* `(`*n*`days after)`. When the `view -sys -lic` operation is executed, `(`*n*`days after)` appears if there are *n* days left until the license period expires. • For example, when there are 100 days left until the license period (2006/08/21) expires, the following appears: `2006/08/21(100days after)`

Parameter and program information to be displayed	Item	Description
`-audlog` Information about audit log data collection settings	`Audit Log`	Settings for audit log data collection: • Whether collection is enabled `on`: Enabled `off`: Disabled • Audit log data collection level: When audit log data collection is on, the collection level that has been set is displayed within the parentheses following `on`. The collection level indicates a severity level. A value from `0` to `7` is displayed as the collection value.

	`Audit Log Category`	The categories of audit log data to be output are displayed. When more than one category is displayed, commas (`,`) are used as separators.
		`ss`: `StartStop`
		`a`: `Authentication`
		`ca`: `ConfigurationAccess`
		If all the above categories are specified, `all` is displayed.
		If the collection of audit log data is disabled, a hyphen (`-`) is displayed.

`-pstv` The display-of-the-physical-storage-system-information setting	Physical Storage View	The value of the display-of-the-physical-storage-system-information setting is displayed. `on`: Enabled `off`: Disabled

Examples

Example 1

The following example displays configuration information for HDLM functions on a remote management client:

```
PROMPT>dlnkmgr -l view -sys
HDLM Version                    : x.x.x-xx
Service Pack Version            :
HDLM Manager Ver         WakeupTime
Alive        x.x.x-xx    yyyy/mm/dd hh:mm:ss
License Type Expiration
Permanent    -
KAPL01001-I The HDLM command completed normally. Operation name
= view, completion time = yyyy/mm/dd hh:mm:ss
PROMPT>
```

Example 2

The following example displays HDLM manager information:

```
PROMPT>dlnkmgr -l view -sys -msrv
HDLM Manager Ver          WakeupTime
Alive        x.x.x-xx     yyyy/mm/dd hh:mm:ss
KAPL01001-I The HDLM command completed normally. Operation name
= view, completion time = yyyy/mm/dd hh:mm:ss
PROMPT>
```

Example 3

The following example shows how to display information about the HDLM license:

```
PROMPT>dlnkmgr -l view -sys -lic
License Type Expiration
Permanent    -
KAPL01001-I The HDLM command completed normally. Operation name
= view, completion time = yyyy/mm/dd hh:mm:ss
PROMPT>
```

Example 4

The following example shows how to display information about the audit log settings:

```
PROMPT>dlnkmgr -l view -sys -audlog
Audit Log                      : off
Audit Log Category             : -
KAPL01001-I The HDLM command completed normally. Operation name
= view, completion time = yyyy/mm/dd hh:mm:ss
PROMPT>
```

Example 5

The following example shows how to display the value of the display-of-the-physical-storage-system-information setting:

```
PROMPT>dlnkmgr -l view -sys -pstv
Physical Storage View          : off
KAPL01001-I The HDLM command completed normally. Operation name
= view, completion time = yyyy/mm/dd hh:mm:ss
PROMPT>
```

To display path information

When displaying path information, if you specify either the `-item` or `-c` parameter and also specify the `-path` parameter, you can select the items to display and display a summary of path information. This section describes each parameter, path information and displayed items.

To display path information

`-path`

When you specify the `-path` parameter and do not specify either the `-c` or `-item` parameter, the information will be displayed about the HDLM managed paths without abbreviating or selecting items.

In the sub-parameters (following `-path`), you can filter the paths to be listed using `-hdev` and sort the list using `-srt`. When you omit both parameters, the command displays information for all the paths in order of increasing AutoPATH_IDs.

For details on what is displayed in each item, see *Table 6-10 Path information on page 6-39*.

AutoPATH_IDs displayed by the `-path` parameter depend on the sequence in which HDLM detects the paths after a host is started up. Because of this, make sure that you use the path name `PathName` to identify a path.

The sub-parameters are as follows:

`-pstv|-vstv`

If the `-pstv` parameter is specified, information about the physical storage system is displayed. If the `-vstv` parameter is specified, information about the storage system recognized by the operating system is displayed. If neither parameter is specified, information is displayed according to the value specified in the `-pstv` parameter of `set` operations.

For information about the items that are displayed differently depending on the specified `-pstv` and `-vstv` parameters, see Table 6-6 Display items for which the display results of the view operation differ depending on the -pstv parameter specification on page 6-21.

`-hdev` *`host-device-name`*

Displays information only for the paths accessing the specified host device.

The *host-device-name* string is case-sensitive.

`-stname`

Use this parameter to display the model ID of the storage system in the product ID element of the `DskName` field. When this parameter is omitted, the command displays the product ID or emulation type of the storage system instead.

For details about the information displayed for product IDs, see *Table 6-12 Product ID displayed by the view -path operation on page 6-45*.

`-iem`

Use this parameter to add `IEP` to path information and display information about intermittent errors.

`-srt {pn|lu|cp}`

Use this parameter to sort the path information in ascending order, according to the specified sorting keys.

The sorting keys are as follows: the first sorting key is the name of the storage system (`DskName`), the second sorting key is the value specified by the `-srt` parameter, and the third sorting key is AutoPATH_ID.

The available parameter values to specify the second sorting key are:

- `pn`: Path name
- `lu`: LU number of the storage system
- `cp`: Port number of the CHA

When the `-srt` parameter is omitted, the path information is listed in ascending order of AutoPATH_IDs.

`-hbaportwwn`

Displays port WWN information for the HBAs connected to the storage system.

`-vmruntimename`

Displays the runtime information for paths managed by VMware vSphere in place of the PathName item.

`-vmstate`

Displays the status of paths managed by VMware vSphere. For details on VMware vSphere path statuses, see *Table 2-6 Correspondence between VMware vSphere and HDLM path statuses on page 2-18*.

`-t`

Omits the title for each information item.

Example

The following example displays path information:

```
PROMPT>dlnkmgr -s host-name -u user-name -p password view -
path
Paths:000006 OnlinePaths:000006
PathStatus   IO-Count    IO-Errors
Online       45          0

PathID PathName
DskName                                      iLU
ChaPort Status     Type IO-Count   IO-Errors  DNum HDevName
000000 0004.0000.0000000000000000.0000 HITACHI .OPEN-
V          .410017           001020           1B
Online     Own           7          0    0 naa.
60060e8012271b005040271b00001020
000001 0004.0000.0000000000000000.0000 HITACHI .OPEN-
V          .410017           001021           1B
Online     Own           7          0    0 naa.
60060e8012271b005040271b00001021
000002 0004.0000.0000000000000000.0000 HITACHI .OPEN-
V          .410017           001022           1B
Online     Own           7          0    0 naa.
60060e8012271b005040271b00001022
000003 0005.0000.0000000000000000.0000 HITACHI .OPEN-
V          .410017           001020           2B
Online     Own           8          0    0 naa.
60060e8012271b005040271b00001020
000004 0005.0000.0000000000000000.0000 HITACHI .OPEN-
V          .410017           001021           2B
```

```
Online     Own           8          0    0 naa.
60060e8012271b005040271b00001021
000005 0005.0000.0000000000000000.0000 HITACHI .OPEN-
V          .410017           001022           2B
Online     Own           8          0    0 naa.
60060e8012271b005040271b00001022
KAPL01001-I The HDLM command completed normally. Operation
name = view(-vstv), completion time = yyyy/mm/dd hh:mm:ss
PROMPT>
```

To display path information, by selecting a display item

`-path -item`

When you specify the `-path` parameter together with the `-item` parameter, the command only displays the items specified by the value of the `-item` parameter.

When the value of the `-item` parameter is omitted, only the `PathID` and the `Status` fields are displayed.

The following table lists the correspondence between the display items that can be selected by using the `-item` parameter and the parameter values that can be specified after the `-item` parameter.

Table 6-9 Correspondence between the items displayed by the dlnkmgr view -path -item command and the values of the -item parameter

Items displayed by the dlnkmgr view -path -item command	Values specified after the -item parameter
PathID#	None
PathName	pn
DskName	dn
iLU	lu
ChaPort	cp
Status#	None
Type	type
IO-Count	ic
IO-Errors	ie
DNum	dnu
HDevName	hd
IEP	iep
HBAPortWWN	hbaportwwn
VmRuntimeName	vmruntimename
VmState	vmstate

Items displayed by the dlnkmgr view -path -item command	Values specified after the -item parameter
VmPathUID	vmpathuid
Physical-LDEV	phys
Virtual-LDEV	virt
Physical-DskName	vid
Physical-iLU	vid
Physical-ChaPort	vid
Org-DskName	ha
Org-iLU	ha

#

Because both PathID and Status are always displayed, you do not have to specify any parameters.

In the sub-parameters following -path -item, you can list the paths (-hdev) and sort the list (-srt). If you omit both parameters, the command displays information for all the paths in ascending order of AutoPATH_IDs.

These sub-parameters are:

-pstv|-vstv

If the -pstv parameter is specified, information about the physical storage system is displayed. If the -vstv parameter is specified, information about the storage system recognized by the operating system is displayed. If neither parameter is specified, information is displayed according to the value specified in the -pstv parameter of set operations.

For information about the items that are displayed differently depending on the specified -pstv and -vstv parameters, see Table 6-6 Display items for which the display results of the view operation differ depending on the -pstv parameter specification on page 6-21.

-hdev *host-device-name*

Displays information only for the paths accessing the specified host device.

The *host-device-name* string is case-sensitive.

When you specify this parameter, HDevName is displayed by default. It is not necessary to specify hd for the -item parameter.

-stname

Use this parameter to display the model ID of the storage system in the product ID element of the DskName field. When this parameter is omitted, the command displays the product ID or emulation type of the storage system instead.

For details about the information to be displayed for product IDs, see *Table 6-12 Product ID displayed by the view -path operation on page 6-45*.

When you use this parameter, `DskName` is displayed by default. It is not necessary to specify `dn` for the `-item` parameter.

`-srt {pn|lu|cp}`

Use this parameter to sort the path information in ascending order, according to the specified sorting key.

The sorting keys are as follows: the first sorting key is the name of the storage system (`DskName`), the second sorting key is the value specified by the `-srt` parameter, and the third sorting key is AutoPATH_ID.

The available parameter values to specify the second sorting key are:

- `pn`: Path name
- `lu`: LU number of the storage system
- `cp`: Port number of the CHA

  When the `-srt` parameter is omitted, the path information is listed in order of ascending AutoPATH_IDs.

  When you use this parameter, the items used for the sorting keys (DskName, AutoPATH_ID, and the item specified by this parameter) are displayed by default. Therefore, it is not necessary to specify these items for the `-item` parameter.

`-t`

Omits the title for each information item.

Example

The following example displays path information with VmRuntimeName, VmState, and VmPathUID selected as display items:

```
PROMPT>dlnkmgr view -path -item vmruntimename vmstate
vmpathuid
Paths:000002 OnlinePaths:000002
PathStatus   IO-Count    IO-Errors
Online       63          0

PathID VmRuntimeName   Status VmState VmPathUID
000000 vmhba2:C0:T0:L0 Online active  fc.200000e08b90c61c:
210000e08b90c61c-fc.50060e8010027a85:50060e8010027a85-
t10.HITACHI_770101520191
000001 vmhba5:C0:T0:L0 Online active  fc.
20000024ff293611:21000024ff293611-fc.
50060e8010027a81:50060e8010027a81-t10.HITACHI_770101520191
KAPL01001-I The HDLM command completed normally. Operation
name = view, completion time = yyyy/mm/dd hh:mm:ss
PROMPT>
```

To display path information, by abbreviating the list items

`-path -c`

When you specify the `-path` parameter together with the `-c` parameter, the command selects certain items to be displayed, and shortens the contents of each item so that the information about each path fits into a single line on the screen.

The items that are displayed are `PathID`, `DskName`, `iLU`, `CP`, `Status`, and `Type`.

For details on what is displayed for each item, see *Table 6-10 Path information on page 6-39*.

When you use the `-c` parameter, the number of characters that can be displayed in the product ID element of the `DskName` field is limited to 10. When there are 11 or more characters in the product ID, the 8th and following characters are abbreviated to ellipses (`...`).

The sub-parameters (following `-path -c`) are:

`-pstv|-vstv`

If the `-pstv` parameter is specified, information about the physical storage system is displayed. If the `-vstv` parameter is specified, information about the storage system recognized by the operating system is displayed. If neither parameter is specified, information is displayed according to the value specified in the `-pstv` parameter of `set` operations.

For information about the items that are displayed differently depending on the specified `-pstv` and `-vstv` parameters, see Table 6-6 Display items for which the display results of the view operation differ depending on the -pstv parameter specification on page 6-21.

`-stname`

Use this parameter to display the model ID of the storage system in the product ID element of the `DskName` field. When this parameter is omitted, the command displays the product ID or emulation type of the storage system instead.

For details about the information about product IDs, see *Table 6-12 Product ID displayed by the view -path operation on page 6-45*.

`-srt {lu|cp}`

Use this parameter to sort the path information in ascending order, according to the specified sorting key.

The sorting keys are as follows: the first sorting key is the name of the storage system (`DskName`), the second sorting key is the value specified by the `-srt` parameter, and the third sorting key is AutoPATH_ID.

The available parameter values to specify the second sorting key are:

- `lu`: LU number of the storage system
- `cp`: Port number of the CHA

When the `-srt` parameter is omitted, the path information is listed in ascending order of AutoPATH_IDs.

-t

Omits the title for each information item.

Example

The following example shows how to abbreviate the display of information about the paths, ordered by iLU.

```
PROMPT>dlnkmgr -s host-name -u user-name -p password view -path -
c -srt lu
Paths:000006 OnlinePaths:000006
PathStatus   IO-Count    IO-Errors
Online       45          0

PathID DskName                                iLU              CP
Status     Type
000000 HITACHI .OPEN-V          .410017     001020           1B
Online     Own
000003 HITACHI .OPEN-V          .410017     001020           2B
Online     Own
000001 HITACHI .OPEN-V          .410017     001021           1B
Online     Own
000004 HITACHI .OPEN-V          .410017     001021           2B
Online     Own
000002 HITACHI .OPEN-V          .410017     001022           1B
Online     Own
000005 HITACHI .OPEN-V          .410017     001022           2B
Online     Own
KAPL01001-I The HDLM command completed normally. Operation name
= view(-vstv), completion time = yyyy/mm/dd hh:mm:ss
PROMPT>
```

Items of path information

Table 6-10 Path information on page 6-39 describes the displayed path information. The following explains the table headings:

- No summary displayed: The user specifies only the `-path` parameter or the `-path -item` parameter.
- Summary displayed: The user specifies the `-path -c` parameter.

Table 6-10 Path information

Displayed item		Description
No summary displayed	**Summary displayed**	
`Paths`		Total number of displayed paths, indicated by a decimal number.
`OnlinePaths`		Number of online paths from within the displayed paths, indicated by a decimal number. When the value of `Paths`

Displayed item		Description
No summary displayed	Summary displayed	
		equals the value of `OnlinePaths`, all paths are online. If the value of `OnlinePaths` is less than that of `Paths`, some paths are offline. In this case, you should check the offline paths and take appropriate action for any paths that have an error status.
`PathStatus`		Status of the displayed paths. The displayed status indicates the following: • `Online`: All paths are available. • `Reduced`: Some paths are not available. `Reduced` means that some paths might have an error status, in which case you should check the status of individual paths and resolve the problem for any paths that have an error status.
`IO-Count`		Total I/O count for all the displayed paths, indicated by a decimal number. The maximum value that can be displayed is 2^{32} - 1 (4294967295). If the total I/O count reaches the maximum value, it will re-start from 0.
`IO-Errors`		Total I/O error count for all the displayed paths, indicated by a decimal number. The maximum value that can be displayed is 2^{32} - 1 (4294967295). If the total I/O error count reaches the maximum value, it will re-start from 0..
`PathID`		The AutoPATH_ID indicated by a decimal number. The AutoPATH_ID is assigned every time the host is restarted.
`PathName`#1	-	The path name, which indicates a path. When you modify the system configuration or replace a hardware item, you should check the path names to identify the path that will be affected by the change. `Path name` consists of the following four elements, separated by periods: • Host port number (hexadecimal number) • Bus number (hexadecimal number) • Target ID (hexadecimal number) • Host LU number (hexadecimal number) For details about each element of the path name and its representation in VMware vSphere, see *Table 6-11 Elements of a path name on page 6-45*.
`DskName`#1	`DskName`	Storage system name, which identifies the storage system that is accessed by a path. A storage system name consists of the following three elements, separated by periods: • Vendor ID: The name of the storage system vendor (for example, `HITACHI`). • Product ID: Indicates the storage system product ID, emulation type, or model ID (for example, `DF600F`).

Displayed item		Description
No summary displayed	Summary displayed	
		For more details, see *Table 6-12 Product ID displayed by the view -path operation on page 6-45*. • Serial number: The serial number of the storage system (for example, `0051`). You can identify an actual storage system by referencing the above information from the storage system management program.
`iLU`#1	`iLU`	LU number in the storage system. This number combined with the storage system name (shown in `DskName`) identifies the LU that is accessed by a path. • For the HUS VM, indicated by a hexadecimal number. The first two characters of `iLU` are the CU number, and the last two characters are the internal LU number within the CU. • For P9500, XP8, and XP7, indicated by a hexadecimal number. The first two characters of `iLU` are 00, the middle two numbers are the CU number, and the last two characters are the internal LU number within the CU. • For HUS100 series, indicated by a decimal number. The entire value of `iLU` is the internal LU number within the storage system. You can identify an actual LU by referencing `iLU` from the storage system management program. • For Hitachi Virtual Storage Platform, VSP 5000 series, VSP G1000, G1500, VSP F1500, VSP E series, VSP Gx00 models, VSP Fx00 models, and VSP N series indicated by a hexadecimal number. The first two characters of `iLU` are the number of the logical DKC (Disk Controller), the middle two numbers are the CU number, and the last two characters are the internal LU number within the CU.
`ChaPort`#1	`CP`	Port number of the CHA, which identifies the CHA port that is mounted on the storage system. You can identify an actual CHA port by referencing this number from the storage system management program.
`Status`		Status of the path • `Online`: Online • `Offline(C)`: Offline status caused by a command operation • `Offline(E)`: Offline due to an error • `Online(S)`: I/O operations to the primary volume (P-VOL) in an HAM environment are suppressed.

Displayed item		Description
No summary displayed	Summary displayed	
		• Online(D): The paths to the primary volume (P-VOL) in an HAM environment can be recovered automatically. Paths that are in Offline(E) status require corrective action. The appropriate action can be determined by referring to *What to do for a path error on page 5-2*.
Type#1	Type	Attribute of the path • Own: Owner path • Non: Non-owner path If the storage system is supported by HDLM, usually all paths are owner paths.#2
IO-Count#1	-	Total I/O count for the path, indicated by a decimal number. The maximum value that can be displayed is 2^{32} - 1 (4294967295). If the total I/O count reaches the maximum value, it will re-start from 0. To reset the IO-Count value to 0, execute the dlnkmgr command's clear operation. Executing the clear operation also resets the number of I/O errors (IO-Errors) to 0. For details about the clear operation, see *clear (returns the path statistics to the initial value) on page 6-3*. However, a hyphen (-) is displayed when an algorithm other than the following is used: • exrr: The Extended Round Robin algorithm • exlio: The Extended Least I/Os algorithm • exlbk: The Extended Least Blocks algorithm
IO-Errors#1	-	Total I/O error count for the path, indicated by a decimal number. The maximum value that can be displayed is 2^{32} - 1 (4294967295). If the total I/O error count reaches the maximum value, it will re-start from 0. To reset the IO-Errors value to 0, execute the dlnkmgr command's clear operation. Executing the clear operation also clears the number of I/O operations (IO-Count) to 0. For details about the clear operation, see *clear (returns the path statistics to the initial value) on page 6-3*.
DNum#1	-	When Dev indicates an entire LU, 0 is displayed.
HDevName#1	-	Host device name.
IEP#1	-	Information about the intermittent error. This item is displayed only when you specify the -iem parameter or when you specify iep for the -item parameter. One of the following values is displayed for each path: • -

Displayed item		Description
No summary displayed	Summary displayed	
		Indicates that intermittent error monitoring is disabled or the path status is `Offline(C)`. • A value of at least 0 Indicates the number of errors that occurred during intermittent error monitoring (the path status is `Offline(E)` or `Online`). • * Indicates that an intermittent error occurred (automatic failbacks do not check the path) (the path status is `Offline(E)`).
`HBAPortWWN` #1	–	A 16-digit hexadecimal number indicating the WWN information for an HBA connected to the storage system. This item is displayed only when you specify the `-hbaportwwn` parameter or when you specify `hbaportwwn` for the `-item` parameter.
`VmRuntimeName`#1	–	Displays the runtime information for paths managed by VMware vSphere in path information fields. If you specify the `-vmruntimename` parameter together with the `-path` parameter, this information is displayed instead of the `PathName` item.
`VmState`#1	–	The path status managed by VMware vSphere. This item is displayed only when you specify the `-vmstate` parameter or when you specify `vmstate` for the `-item` parameter. • `active`: Online • `standby`: Online • `off`: Offline status caused by a command operation (`Offline(C)`) • `dead`: Offline due to an error (`Offline(E)`) • `unavailable`: Offline due to an error (`Offline(E)`) • `perm_loss`: Offline due to an error (`Offline(E)`) Paths that are `dead`, `unavailable`, or `perm_loss` require corrective action. The appropriate action can be determined by referring to *What to do for a path error on page 5-2*.
`VmPathUID`#1	–	The UID of the path managed by VMware vSphere. This item is displayed when specified in a value of the `-path -item` parameter.
`Physical-LDEV`	–	The model ID, serial number, and iLU number of a physical volume are separated by periods and displayed. You can identify the physical volume from this information. If the volume is not virtualized, a hyphen (-) is displayed.
`Virtual-LDEV`	–	Displays the model ID, serial number, and iLU number of a virtual volume, separated by periods.

Displayed item		Description
No summary displayed	Summary displayed	
		You can identify the virtual volume from this information. If the volume is not virtualized, a hyphen (–) is displayed.
`Physical-DskName`	–	When a path is migrated using a virtual ID, displays the name of the storage system that is connected by the migration-destination path. A storage system name consists of the following three elements, separated by periods: • Vendor ID: The name of the storage system vendor. • Product ID: Indicates the storage system product ID, emulation type, or model name. • Serial number: The serial number of the storage system. When a virtual ID is not used, a hyphen (–) is displayed.
`Physical-iLU`	–	When a path is migrated using a virtual ID, displays LU number in the storage system that is connected by the migration-destination path. • For Hitachi Virtual Storage Platform, indicated by a hexadecimal number. The first two characters of `iLU` are the number of the logical DKC (Disk Controller), the middle two numbers are the CU number, and the last two characters are the internal LU number within the CU. When a virtual ID is not used, a hyphen (–) is displayed.
`Physical-ChaPort`	–	When a path is migrated using a virtual ID, displays port number of the CHA that is connected by the migration-destination path. When a virtual ID is not used, a hyphen (–) is displayed.
`Org-DskName`	–	For HAM environments, the name of the storage system on the secondary volume (S-VOL) is displayed. A storage system name consists of the following three elements, separated by periods: • Vendor ID: The name of the storage system vendor. • Product ID: Indicates the storage system product ID, emulation type, or model ID. For more details, see *Table 6-12 Product ID displayed by the view -path operation on page 6-45*. • Serial number: The serial number of the storage system. If an HAM environment is not used, a hyphen (–) is displayed.
`Org-iLU`	–	For HAM environments, an LU number on the secondary volume (S-VOL) is displayed. • For HUS VM, indicated by a hexadecimal number. The first two characters of `iLU` are the CU number, and the

Displayed item		Description
No summary displayed	Summary displayed	
		last two characters are the internal LU number within the CU. • For Hitachi Virtual Storage Platform, indicated by a hexadecimal number. The first two characters of `iLU` are the number of the logical DKC (Disk Controller), the middle two numbers are the CU number, and the last two characters are the internal LU number within the CU. If an HAM environment is not used, a hyphen (-) is displayed.

Legend:

- : Not displayed

#1

The path information is displayed only when a value is specified for the `-path -item` parameter.

#2

Non-owner paths exist in the following cases:

- When the HUS100 series is being used, and the dynamic I/O path control function is enabled
- When a global-active device is being used, and the non-preferred path option is set

Table 6-11 Elements of a path name

Element	VMware vSphere representation
Host port number (example: 0000)	Host ID (host port number)
Bus number (example: 0000)	Channel number (bus number)
Target ID (example: 000000000000003A)	Target ID
Host LU number(example: 0005)	Lun (host LU number)

Table 6-12 Product ID displayed by the view -path operation

Model names of storage systems	Product ID	
	Without the -stname parameter	With the -stname parameter (Displays the following for the model name)
HUS100 series	product identifier#1	HUS100

Model names of storage systems	Product ID	
	Without the -stname parameter	With the -stname parameter (Displays the following for the model name)
Hitachi Virtual Storage Platform	Emulation type#1	VSP
VSP 5000 series		VSP_5000
VSP G1000		VSP_G1000
VSP G1500		VSP_G1500
VSP F1500		VSP_F1500
Virtual storage system "VSP G1000, G1500 and VSP F1500"#2		VSP_G1000
VSP E series		VSP_Ex00
VSP Gx00 models		VSP_Gx00
VSP Fx00 models		VSP_Fx00
VSP N series#3		VSP_Gx00
		VSP_Fx00
HUS VM		HUS_VM
P9500		P9500
XP8		XP8
XP7		XP7

#1

If the -c parameter is specified together with the -path parameter, when the number of characters exceeds 10, any characters after the 7th character are displayed as an ellipsis (...).

#2

When the primary volume of the global-active device is not registered to a virtual storage system, the model ID of the storage system of the primary volume is displayed. Note that `VSP_G1000` is displayed when the primary volume is not connected to a host.

#3

`VSP_Gx00` or `VSP_Fx00` is displayed.

To display LU information

When displaying LU information, if the `-item` parameter, or the `-c` parameter is specified at the same time as the `-lu` parameter, you can add and display items and display a summary of LU information. This section describes each parameter and the LU information and displayed items.

To display LU information

`-lu`

When neither the `-c` nor `-item` parameter is specified with the `-lu` parameter, the information about the LU recognized by HDLM is displayed without selecting items to be displayed or displaying a summary. The sorting key is iLU and its configuration information is displayed for each LU.

For details on the content of each displayed item, see *Table 6-14 LU information on page 6-51*.

The sub-parameters are:

`-pstv|-vstv`

If the `-pstv` parameter is specified, information about the physical storage system is displayed. If the `-vstv` parameter is specified, information about the storage system recognized by the operating system is displayed. If neither parameter is specified, information is displayed according to the value specified in the `-pstv` parameter of `set` operations.

For information about the items that are displayed differently depending on the specified `-pstv` and `-vstv` parameters, see Table 6-6 Display items for which the display results of the view operation differ depending on the -pstv parameter specification on page 6-21.

`-hdev` *`host-device-name`*`|-pathid` *`AutoPATH_ID`*

Displays information only for the paths accessing the specified host device, if the `-hdev` parameter is specified.

If the `-pathid` parameter is specified, only information about the LU connected to the path with the specified *AutoPATH_ID* is displayed.

`-t`

Omits the title for each information item.

Example

The following example shows how to display the LU information without selecting items to be displayed:

```
PROMPT>dlnkmgr -s host-name -u user-name -p password view -lu
Product       : VSP_Fx00
SerialNumber  : 410017
LUs           : 3

iLU    HDevName                                PathID Status
001020 naa.60060e8012271b005040271b00001020 000000 Online
                                            000003 Online
001021 naa.60060e8012271b005040271b00001021 000001 Online
                                            000004 Online
001022 naa.60060e8012271b005040271b00001022 000002 Online
                                            000005 Online
KAPL01001-I The HDLM command completed normally. Operation
name = view(-vstv), completion time = yyyy/mm/dd hh:mm:ss
PROMPT>
```

To display LU information (by adding items to be displayed)

`-lu -item`

The items specified with the `-item` option are displayed among with those displayed by the `-lu` option.

When the value of the `-item` parameter is omitted or `all` is specified, all the items, except for `DPC`, `Physical-LDEV`, Virtual-LDEV, `Physical-Product`, `Physical-SerialNumber`, `Physical-iLU`, and `Physical-ChaPort`, `Org-Product`, `Org-SerialNumber`, and `Org-iLU`, that can be displayed are displayed.

The table below lists the correspondence between the display items that can be added by using the `-item` parameter and the parameter values that can be specified after the `-item` parameter.

Table 6-13 Correspondence between the items displayed by the dlnkmgr view -lu -item command and the values of the -item parameter

Items displayed by the dlnkmgr view -lu -item command	Values specified after the -item parameter
SLPR	slpr
PathName	pn
ChaPort	cp
CLPR	clpr
Type	type
IO-Count	ic
IO-Errors	ie
DNum	dnu
IEP	iep
LB	lb
VmPSP	vmpsp
VmRuntimeName	vmruntimename
VmState	vmstate
DPC	dpc
Physical-LDEV	phys
Virtual-LDEV	virt
Physical-Product	vid
Physical-SerialNumber	vid
Physical-iLU	vid
Physical-ChaPort	vid
Org-Product	ha

Items displayed by the dlnkmgr view -lu -item command	Values specified after the -item parameter
`Org-SerialNumber`	`ha`
`Org-iLU`	`ha`
`HaStat`	`hastat`
All items are displayed	`all`

For details on the contents of each displayed item, see *Table 6-14 LU information on page 6-51*.

The sub-parameters are:

`-pstv|-vstv`

If the `-pstv` parameter is specified, information about the physical storage system is displayed. If the `-vstv` parameter is specified, information about the storage system recognized by the operating system is displayed. If neither parameter is specified, information is displayed according to the value specified in the `-pstv` parameter of `set` operations.

For information about the items that are displayed differently depending on the specified `-pstv` and `-vstv` parameters, see Table 6-6 Display items for which the display results of the view operation differ depending on the -pstv parameter specification on page 6-21.

`-hdev` *`host-device-name`*`|-pathid` *`AutoPATH_ID`*

Displays information only for the paths accessing the specified host device, if the `-hdev` parameter is specified.

If the `-pathid` parameter is specified, only information about the LU connected to the path with the specified *AutoPATH_ID* is displayed.

`-t`

Omits the title for each information item.

Example 1

The following example shows the LU information displayed when ChaPort, LB, VmPSP, VmRuntimeName, and VmState are specified as additional display items:

```
PROMPT>dlnkmgr -s host-name -u user-name -p password view -lu
-item cp lb vmpsp vmruntimename vmstate
Product       : VSP_Fx00
SerialNumber  : 410017
LUs           : 3

iLU    HDevName                                LB
VmPSP              PathID VmRuntimeName   ChaPort Status
VmState
001020 naa.60060e8012271b005040271b00001020 exlio
HTI_PSP_HDLM_EXLIO 000000 vmhba4:C0:T0:L0 1B      Online
active
                                           exlio
```

```
HTI_PSP_HDLM_EXLIO 000003 vmhba5:C0:T0:L0 2B      Online
active
001021 naa.60060e8012271b005040271b00001021 exlio
HTI_PSP_HDLM_EXLIO 000001 vmhba4:C0:T0:L1 1B      Online
active
                                            exlio
HTI_PSP_HDLM_EXLIO 000004 vmhba5:C0:T0:L1 2B      Online
active
001022 naa.60060e8012271b005040271b00001022 exlio
HTI_PSP_HDLM_EXLIO 000002 vmhba4:C0:T0:L2 1B      Online
active
                                            exlio
HTI_PSP_HDLM_EXLIO 000005 vmhba5:C0:T0:L2 2B      Online
active
KAPL01001-I The HDLM command completed normally. Operation
name = view(-vstv), completion time = yyyy/mm/dd hh:mm:ss
PROMPT>
```

Example 2

When using HUS100 series storage and displaying LU information with DPC added to the display items:

```
PROMPT>dlnkmgr view -lu -item dpc
Product                  : HUS100
SerialNumber             : 9203008
LUs                      : 3
Dynamic I/O Path Control : on*

iLU    HDevName                 DPC PathID Status
000006 t10.HITACHI_770101520191 on  000000 Online
                                    000003 Online
000007 t11.HITACHI_770101520191 off 000001 Online
                                    000004 Online
000008 t12.HITACHI_770101520191 on  000002 Online
                                    000005 Online
KAPL01001-I The HDLM command completed normally. Operation
name = view, completion time = yyyy/mm/dd hh:mm:ss
PROMPT>
```

To display a summary of LU information

`-lu -c`

When the `-c` parameter is specified with the `-lu` parameter, a summary of LU configuration information is displayed on one line. The total number of paths recognized by HDLM and the number of online paths are displayed for each LU. You cannot specify the `-c` parameter together with the `-hdev` or `-pathid` parameter.

For details on the contents of each display item, see *Table 6-14 LU information on page 6-51*.

The sub-parameters are as follows:

`-pstv|-vstv`

If the `-pstv` parameter is specified, information about the physical storage system is displayed. If the `-vstv` parameter is specified, information about the storage system recognized by the operating system is displayed. If neither parameter is specified, information is displayed according to the value specified in the `-pstv` parameter of `set` operations.

For information about the items that are displayed differently depending on the specified `-pstv` and `-vstv` parameters, see Table 6-6 Display items for which the display results of the view operation differ depending on the -pstv parameter specification on page 6-21.

`-t`

Omits the title for each information item.

Example

The following example shows how to display a summary of LU information (without selecting items to be displayed):

```
PROMPT>dlnkmgr -s host-name -u user-name -p password view -lu
-c
Product  S/N    LUs iLU
HDevName                              Paths  OnlinePaths
VSP_Fx00 410017   3 001020 naa.
60060e8012271b005040271b00001020      2           2
                    001021 naa.
60060e8012271b005040271b00001021      2           2
                    001022 naa.
60060e8012271b005040271b00001022      2           2
KAPL01001-I The HDLM command completed normally. Operation
name = view(-vstv), completion time = yyyy/mm/dd hh:mm:ss
PROMPT>
```

Items of LU information

Table 6-14 LU information on page 6-51 describes the displayed LU information. The following explains the table headings:

- No summary displayed: The user specifies the `-lu` parameter.
- Summary displayed: The user specifies the `-lu -c` parameter.

Table 6-14 LU information

Displayed item		Description
No summary displayed	**Summary displayed**	
`Product`		Model ID of the storage system
`SerialNumber`	`S/N`	Serial number of the storage system
`LUs`		Total number of LUs managed by HDLM among the LUs in the storage system

Displayed item		Description
No summary displayed	Summary displayed	
`Dynamic I/O Path Control`	-	The setting information about the dynamic I/O path control function is displayed for each storage system. `on`: The dynamic I/O path control function is enabled. `off`: The dynamic I/O path control function is disabled. -: The dynamic I/O path control function is not supported. If an LU whose settings differ from the settings based on the system storage unit is included, `*` is added after the `on` or `off` being displayed.
`iLU`		LU number in the storage system. This number combined with the storage system name (shown in `DskName`) identifies the LU that is accessed by a path. • For the HUS VM, indicated by a hexadecimal number. The first two characters of `iLU` are the CU number, and the last two characters are the internal LU number within the CU. • For P9500, XP8, and XP7, indicated by a hexadecimal number. The first two characters of `iLU` are 00, the middle two numbers are the CU number, and the last two characters are the internal LU number within the CU. • For HUS100 series, indicated by a decimal number. The entire value of `iLU` is the internal LU number within the storage system. You can identify an actual LU by referencing `iLU` from the storage system management program. • For Hitachi Virtual Storage Platform, VSP 5000 series, VSP G1000, G1500, VSP F1500, VSP E series, VSP Gx00 models, VSP Fx00 models, and VSP N series indicated by a hexadecimal number. The first two characters of `iLU` are the number of the logical DKC (Disk Controller), the middle two numbers are the CU number, and the last two characters are the internal LU number within the CU.
`SLPR`#1	-	The number of the SLPR to which an LU belongs, indicated by a number from 0 to 31. A hyphen (-) is displayed if the storage logical partition functionality for the storage system for the target LU is not supported.

Displayed item		Description
No summary displayed	Summary displayed	
		Note that a hyphen (–) is displayed even if the iLU is a virtualized volume.
HDevName	HDevName	Host device name.
DPC	–	The setting information about the dynamic I/O path control function is displayed for each LU. on: The dynamic I/O path control function is enabled. off: The dynamic I/O path control function is disabled. –: The dynamic I/O path control function is not supported.
PathID	–	The AutoPATH_ID. AutoPATH_ID is assigned every time the host is restarted.
PathName#1	–	The path name, which indicates a path. When you modify the system configuration or replace a hardware item, you should check the path names to identify the path that will be affected by the change. Path name consists of the following four elements, separated by periods: • Host port number (hexadecimal number) • Bus number (hexadecimal number) • Target ID (hexadecimal number) • Host LU number (hexadecimal number) For details about each element of the path name and its representation in VMware vSphere, see *Table 6-11 Elements of a path name on page 6-45*.
ChaPort#1	–	Port number of the CHA, which identifies the CHA port that is mounted on the storage system. You can identify an actual CHA port by referencing this number from the storage system management program.
CLPR#1	–	The number of the CLPR to which the CHA belongs, indicated by a number from 0 to 31. Note that a hyphen (–) is displayed if the following items are subject to display: • CHA ports in the storage system that do not support the cache logical partition function
Status	–	Status of the path • Online: Online • Offline(C): Offline status caused by a command operation • Offline(E): Offline due to an error

Displayed item		Description
No summary displayed	**Summary displayed**	
		• `Online(S)`: I/O operations to the primary volume (P-VOL) in an HAM environment are suppressed. • `Online(D)`: The paths to the primary volume (P-VOL) in an HAM environment can be recovered automatically. Paths that are in `Offline(E)` status require corrective action. The appropriate action can be determined by referring to *What to do for a path error on page 5-2*.
`Type`#1	–	Attribute of the path • `Own`: Owner path • `Non`: Non-owner path If the storage system is supported by HDLM, usually all paths are owner paths.#2
`IO-Count`#1	–	Total I/O count for a path. The maximum value that can be displayed is 2^{32} - 1 (4294967295). If the total I/O count reaches the maximum value, it is reset, and the count is re-started from 0. To reset the `IO-Count` value to 0, execute the `dlnkmgr` command's `clear` operation. Executing the `clear` operation also resets the number of I/O errors (`IO-Errors`) to 0. For details about the `clear` operation, see *clear (returns the path statistics to the initial value) on page 6-3*. However, a hyphen (-) is displayed when an algorithm other than the following is used: • `exrr`: The Extended Round Robin algorithm • `exlio`: The Extended Least I/Os algorithm • `exlbk`: The Extended Least Blocks algorithm
`IO-Errors`#1	–	Total I/O error count for a path. The maximum value that can be displayed is 2^{32} - 1 (4294967295). If the total I/O error count reaches the maximum value, it is reset, and the count is re-started from 0. To reset the `IO-Errors` value to 0, execute the `dlnkmgr` command's `clear` operation. Executing the `clear` operation also clears the number of I/O operations (`IO-Count`) to 0. For details about the `clear` operation, see *clear (returns the path statistics to the initial value) on page 6-3*.
`DNum`#1	–	When Dev indicates an entire LU, 0 is displayed.
`IEP`#1	–	The displayed paths are assumed to be in an intermittent error status and checked whether those paths are to be operated for automatic failbacks.

Displayed item		Description
No summary displayed	Summary displayed	
		One of the following values is displayed for each path: • -: Indicates that intermittent error monitoring is disabled or the path status is Offline(C). • A value of at least 0: Indicates the number of errors that occurred during intermittent error monitoring. • *: Indicates that an intermittent error occurred (automatic failback does not check the path).
LB#1	-	The algorithm being used for load balancing. • exrr: The Extended Round Robin algorithm • exlio: The Extended Least I/Os algorithm • exlbk: The Extended Least Blocks algorithm • vmwfixed: The Fixed algorithm (VMware) • vmwmru: The Most Recently Used algorithm (VMware) • vmwrr: The Round Robin algorithm (VMware) • unknown: An algorithm other than the above
VmPSP#1	-	The PSP currently in effect.
VmRuntimeName#1	-	In path information fields, displays the path runtime information managed by VMware vSphere.
VmState#1	-	The path status managed by VMware vSphere. • active: Online • standby: Online • off: Offline status caused by a command operation (Offline(C)) • dead: Offline due to an error (Offline(E)) • unavailable: Offline due to an error (Offline(E)) • perm_loss: Offline due to an error (Offline(E)) Paths that are dead, unavailable, or perm_loss require corrective action. The appropriate action can be determined by referring to *What to do for a path error on page 5-2*.
Physical-LDEV	-	The model ID, serial number, and iLU number of a physical volume are separated by periods and displayed.

Displayed item		Description
No summary displayed	Summary displayed	
		You can identify the physical volume from this information. If the volume is not virtualized, a hyphen (-) is displayed.
Virtual-LDEV	-	Displays the model ID, serial number, and iLU number of a virtual volume, separated by periods. You can identify the virtual volume from this information. If the volume is not virtualized, a hyphen (-) is displayed.
Physical-Product	-	When a path is migrated using a virtual ID, displays model ID of the storage system that is connected by the migration-destination path. When a virtual ID is not used, a hyphen (-) is displayed.
Physical-SerialNumber	-	When a path is migrated using a virtual ID, displays serial number of the storage system that is connected by the migration-destination path. When a virtual ID is not used, a hyphen (-) is displayed.
Physical-iLU	-	When a path is migrated using a virtual ID, displays LU number in the storage system that is connected by the migration-destination path. • For Hitachi Virtual Storage Platform, indicated by a hexadecimal number. The first two characters of iLU are the number of the logical DKC (Disk Controller), the middle two numbers are the CU number, and the last two characters are the internal LU number within the CU. When a virtual ID is not used, a hyphen (-) is displayed.
Physical-ChaPort	-	When a path is migrated using a virtual ID, displays port number of the CHA that is connected by the migration-destination path. When a virtual ID is not used, a hyphen (-) is displayed.
-	Paths	Total number of the paths recognized by HDLM for the LU to be displayed.
-	OnlinePaths	Number of available paths in the displayed paths, indicated by a decimal number. When the value of Paths equals the value of OnlinePaths, all paths are online. If the value of OnlinePaths is less than that of Paths, some paths are offline. In this case, you should check the offline paths and take appropriate action for any paths that have an error status.

Displayed item		Description
No summary displayed	Summary displayed	
`Org-Product`	-	For HAM environments, the model ID of the storage system on the secondary volume (S-VOL) is displayed. If an HAM environment is not used, a hyphen (-) is displayed.
`Org-SerialNumber`	-	For HAM environments, the serial number of the storage system on the secondary volume (S-VOL) is displayed. If an HAM environment is not used, a hyphen (-) is displayed.
`Org-iLU`	-	For HAM environments, an LU number in the storage system on the secondary volume (S-VOL) is displayed. • For HUS VM, indicated by a hexadecimal number. The first two characters of `iLU` are the CU number, and the last two characters are the internal LU number within the CU. • For Hitachi Virtual Storage Platform, indicated by a hexadecimal number. The first two characters of `iLU` are the number of the logical DKC (Disk Controller), the middle two numbers are the CU number, and the last two characters are the internal LU number within the CU. If an HAM environment is not used, a hyphen (-) is displayed.

Legend:

- : Not displayed

#1

This information is displayed when one of the following conditions exist:

- The user selected the item to be displayed by using the `-lu -item` parameter.
- `all` was specified.
- No value was specified for the parameter.

#2

Non-owner paths exist in the following cases:

- When the HUS100 series is being used, and the dynamic I/O path control function is enabled
- When a global-active device is being used, and the non-preferred path option is set

To display the format of the view operation

`-help`

Use this parameter to display the `view` operation format.

Example 1

The following example displays the format of the operation for both a host and remote management client:

```
PROMPT>dlnkmgr view -help
view:
  Format
    dlnkmgr [Host-Connection-Options] view -sys
                                       [ -sfunc | -satp | -rule | -
expathusetimes | -exrndpathusetimes ] [-t]
    dlnkmgr [Host-Connection-Options] view -path
            [-iem] [-hbaportwwn] [-vmruntimename] [-vmstate]
        [ -hdev HostDeviceName ] [-stname] [-srt {pn | lu | cp}] [-t]
    dlnkmgr [Host-Connection-Options] view -path
          -item [pn] [dn] [lu] [cp] [type] [ic] [ie] [dnu] [hd] [iep]
                    [hbaportwwn] [vmruntimename] [vmstate]
[vmpathuid]
                    [phys] [virt] [vid] [ha]
                    [-pstv | -vstv] [ -hdev HostDeviceName ] [-
stname]
                    [-srt {pn | lu | cp}] [-t]
    dlnkmgr [Host-Connection-Options] view -path -c
                                       [-pstv | -vstv] [-stname] [-
srt {lu | cp}] [-t]
    dlnkmgr [Host-Connection-Options] view -lu
                  [-pstv | -vstv] [ -hdev HostDeviceName | -pathid
AutoPATH_ID ] [-t]
    dlnkmgr [Host-Connection-Options] view -lu
         -item [ [slpr] [pn] [cp] [clpr] [type] [ic] [ie] [dnu]
[iep] [dpc]
                 [lb] [vmpsp] [vmruntimename] [vmstate]
                 [phys] [virt] [vid] [ha] [hastat] | all ]
                  [-pstv | -vstv] [ -hdev HostDeviceName | -pathid
AutoPATH_ID ] [-t]
    dlnkmgr [Host-Connection-Options] view -lu -c [-pstv | -vstv] [-
t]
    dlnkmgr -l view -sys [ -msrv | -lic | -audlog ] [-t]
   Host-Connection-Options:
     [ -s SERVER      | --server=SERVER ]
     [ -u USERNAME    | --username=USERNAME ]
     [ -p PASSWORD    | --password=PASSWORD ]
KAPL01001-I The HDLM command completed normally. Operation name =
help, completion time = yyyy/mm/dd hh:mm:ss
PROMPT>
```

Example 2

The following example displays the format of the operation for a host:

```
PROMPT>dlnkmgr -s host-name -u user-name -p password view -help
```

```
view:
  Format
    dlnkmgr [Host-Connection-Options] view -sys
                                        [ -sfunc | -satp | -rule | -
expathusetimes | -exrndpathusetimes ] [-t]
    dlnkmgr [Host-Connection-Options] view -path
            [-iem] [-hbaportwwn] [-vmruntimename] [-vmstate]
        [ -hdev HostDeviceName ] [-stname] [-srt {pn | lu | cp}] [-t]
    dlnkmgr [Host-Connection-Options] view -path
          -item [pn] [dn] [lu] [cp] [type] [ic] [ie] [dnu] [hd] [iep]
                    [hbaportwwn] [vmruntimename] [vmstate]
[vmpathuid]
                    [phys] [virt] [vid] [ha]
        [-pstv | -vstv] [ -hdev HostDeviceName ] [-stname]
                    [-srt {pn | lu | cp}] [-t]
    dlnkmgr [Host-Connection-Options] view -path -c
                                        [-pstv | -vstv] [-stname] [-
srt {lu | cp}] [-t]
    dlnkmgr [Host-Connection-Options] view -lu
                   [-pstv | -vstv] [ -hdev HostDeviceName | -pathid
AutoPATH_ID ] [-t]
    dlnkmgr [Host-Connection-Options] view -lu
         -item [ [slpr] [pn] [cp] [clpr] [type] [ic] [ie] [dnu]
[iep] [dpc]
                  [lb] [vmpsp] [vmruntimename] [vmstate]
                  [phys] [virt] [vid] [ha] [hastat] | all ]
                   [-pstv | -vstv] [ -hdev HostDeviceName | -pathid
AutoPATH_ID ] [-t]
    dlnkmgr [Host-Connection-Options] view -lu -c [-pstv | -vstv] [-
t]
   Host-Connection-Options:
     [ -s SERVER      | --server=SERVER ]
     [ -u USERNAME    | --username=USERNAME ]
     [ -p PASSWORD    | --password=PASSWORD ]
KAPL01001-I The HDLM command completed normally. Operation name =
help, completion time = yyyy/mm/dd hh:mm:ss
PROMPT>
```

Example 3

The following example displays the format of the operation for a remote management client:

```
PROMPT>dlnkmgr -l view -help
view:
  Format
    dlnkmgr -l view -sys [ -msrv |  -lic | -audlog ] [-t]
KAPL01001-I The HDLM command completed normally. Operation name =
help, completion time = yyyy/mm/dd hh:mm:ss
PROMPT>
```

refresh (applies storage system settings to HDLM)

The refresh operation applies the storage system settings to HDLM.

Format

To apply storage system settings to HDLM

```
dlnkmgr [-s host-name -u user-name -p password] refresh -gad
```

To apply the latest model ID to HDLM

```
dlnkmgr [-s host-name -u user-name -p password] refresh -stname
```

To display the format of the refresh operation

```
dlnkmgr [-s host-name -u user-name -p password] refresh -help
```

Parameters

To apply storage system settings to HDLM

`-gad`

The non-preferred path option that is set to the paths to global-active device pair volumes is applied to the HDLM path attribute. A path for which the non-preferred path option is set becomes a non-owner path, and a path for which the non-preferred path option is not set becomes an owner path.

If you specify the `-gad` parameter for the `refresh` operation, make sure the statuses of all paths to global-active device pair volumes are `Online`.

If you restart the host, the settings at the time of restart are applied to the HDLM path attribute.

Example

To apply the attribute of a path to a global-active device volume:

```
PROMPT>dlnkmgr view -lu -item type phys
Product : VSP_G1000
SerialNumber : 10051
LUs : 1

iLU    HDevName                                PathID Status
Type  Physical-LDEV
001910 naa.60060e8007274300000302743000019 10 000000 Online Own
VSP_G1000.10051.001910
                                               000001 Online Own
VSP_G1000.10051.001910
                                               000002 Online Own
VSP_G1000.10057.001A10
                                               000003 Online Own
VSP_G1000.10057.001A10
KAPL01001-I The HDLM command completed normally. Operation
name = view(-vstv), completion time =  yyyy/mm/dd  hh:mm:ss
PROMPT>

PROMPT>dlnkmgr refresh -gad
KAPL01001-I The HDLM command completed normally. Operation
name = refresh, completion time =  yyyy/mm/dd  hh:mm:ss
```

```
PROMPT>

PROMPT>dlnkmgr view -lu -item type phys
Product : VSP_G1000
SerialNumber : 10051
LUs : 1

iLU    HDevName                                PathID Status
Type  Physical-LDEV
001910 naa.60060e8007274300000302743000019 10 000000 Online Own
VSP_G1000.10051.001910
                                               000001 Online Own
VSP_G1000.10051.001910
                                               000002 Online Non
VSP_G1000.10057.001A10
                                               000003 Online Non
VSP_G1000.10057.001A10
KAPL01001-I The HDLM command completed normally. Operation
name = view(-vstv), completion time =  yyyy/mm/dd  hh:mm:ss
PROMPT>
```

To apply the latest model ID to HDLM

`-stname`

The latest model ID of the storage system is applied to HDLM. Execute the `refresh -stname` operation after changing the storage system from VSP G1000 to VSP G1500.

When the host is restarted, the latest model ID is applied to HDLM. (Executing the `refresh -stname` operation is not required when the host is restarted.)

Example

```
PROMPT>dlnkmgr view -lu
Product : VSP_G1000
SerialNumber : 10051
LUs : 1

iLU    HDevName                                PathID Status
001910 naa.60060e8007274300000302743000019 10 000000 Online
                                               000001 Online
KAPL01001-I The HDLM command completed normally. Operation
name = view(-vstv), completion time = yyyy/mm/dd  hh:mm:ss
PROMPT>

PROMPT>dlnkmgr refresh -stname
KAPL01001-I The HDLM command completed normally. Operation
name = refresh, completion time = yyyy/mm/dd  hh:mm:ss
PROMPT>

PROMPT>dlnkmgr view -lu
Product : VSP_G1500
SerialNumber : 10051
LUs : 1

iLU    HDevName                                PathID Status
```

```
001910 naa.60060e8007274300000302743000019 10 000000 Online
                                           000001 Online
KAPL01001-I The HDLM command completed normally. Operation
name = view(-vstv), completion time = yyyy/mm/dd  hh:mm:ss
PROMPT>
```

To display the format of the refresh operation

`-help`

Use this parameter to display the format of the `refresh` operation.

Example

```
PROMPT>dlnkmgr refresh -help
refresh:
  Format
    dlnkmgr [Host-Connection-Options] refresh [-gad | -stname]
   Host-Connection-Options:
     [ -s SERVER      | --server=SERVER ]
     [ -u USERNAME    | --username=USERNAME ]
     [ -p PASSWORD    | --password=PASSWORD ]
KAPL01001-I The HDLM command completed normally. Operation
name = refresh, completion time = yyyy/mm/dd  hh:mm:ss
PROMPT>
```

7

Utility reference

This chapter explains the utilities used by HDLM.

Overview of the utilities

HDLM provides the following utilities:

- The `DLMgetras` utility for collecting HDLM error information

  When an error occurs, this utility collects the files that contain the information that you need to submit to your HDLM vendor or maintenance company. For details about the `DLMgetras` utility, see *The DLMgetras utility for collecting HDLM error information on page 7-2*.
- The utility for creating HDLM Credential Store (`dlmcreatecredstore`)

  This utility creates a Credential Store file used to link with Global Link Manager when the VMware PowerCLI is used. For details on the `dlmcreatecredstore` utility, see *The utility for creating HDLM Credential Store (dlmcreatecredstore) on page 7-7*.
- The utility for displaying HDLM performance information (`dlmperfinfo`)

  This utility collects performance information about the paths managed by HDLM, and then displays the information or outputs it to a file. For details on the `dlmperfinfo` utility, see *The utility for displaying HDLM performance information (dlmperfinfo) on page 7-8*.
- The utility for configuring HDLM remote management client environments (`dlmrmcenv`)

  This utility configures the operating environments of remote management clients. For details about the `dlmrmcenv` utility, see *The dlmrmcenv utility for configuring HDLM remote management client environments on page 7-21*.
- The utility for installing HDLM (`installhdlm`)

  This utility performs a new installation, upgrade installation, or re-installation of HDLM in the unattended installation mode. In addition, information set during installation can be displayed. For details about the `installhdlm` utility, see *The installhdlm utility for installing HDLM on page 7-23*.
- The utility for removing HDLM (`removehdlm`)

  This utility removes HDLM normally, or in unattended removal mode. For details about the `removehdlm` utility, see *The removehdlm utility for removing HDLM on page 7-26*.

The DLMgetras utility for collecting HDLM error information

This utility collects information that is needed to analyze HDLM errors that have occurred: information such as integrated trace files, trace files, definition files, and OS information.

Whenever the host is restarted, some of the information that is collected by the `DLMgetras` utility will be cleared. As a result, whenever an error occurs, immediately execute this utility to avoid losing any valuable information.

Format

Execute the `DLMgetras` utility in the command prompt of the VMware vSphere CLI or Windows PowerShell.

```
DLMgetras {-s host-name -u user-name -p password [folder-to-which-
collected-information-is-output] [-eventlogtime yyyy/mm/dd | -
eventlogsize {all | maximum-file-length}] | -h}
```

You can also use lower-case characters as follows:

```
dlmgetras {-s host-name -u user-name -p password [folder-to-which-
collected-information-is-output] [-eventlogtime yyyy/mm/dd | -
eventlogsize {all | maximum-file-length}] | -h}
```

Parameters

host-name

Specify the host name for which to collect error information.

user-name

Specify the user name used to log in to the host.

password

Specify the password used to log in to the host.

folder-to-which-collected-information-is-output

Specify the output folder for the information that is to be collected by the `DLMgetras` utility. The output-destination folders shown in *Table 7-1 List of error information collected by the `DLMgetras` utility for collecting error information on page 7-4* are created in a folder of your choosing, and the information is then stored in the output-destination folders.

-eventlogtime *yyyy/mm/dd*

The utility obtains logs from each application, system, and security event log. The logs obtained are those output after 00:00 on the date *yyyy/mm/dd*. Specify the date in the *yyyy/mm/dd* format.

-eventlogsize {all | *maximum-file-length*}

all

Logs from all applications, systems, and security event logs are obtained.

maximum-file-length

The utility obtains logs from each application, system, and security event log. The logs are obtained, starting from the most recent log, until the log size reaches *maximum-file-length*. Specify the log size in MB. The specifiable value ranges from 1 to 4096.

-h

Displays the format of the `DLMgetras` utility.

Notes

- You cannot specify the `-eventlogsize {all | maximum-file-length}` parameter together with the `-eventlogtime yyyy/mm/dd` parameter.
- If neither the `-eventlogsize {all | maximum-file-length}` parameter nor the `-eventlogtime yyyy/mm/dd` parameter are specified, the utility's default is to obtain a maximum of 8 MB of event log data.
- If the specified folder to which collected information is output already exists, an overwrite confirmation message is displayed. Responding by entering `y` instructs the `DLMgetras` utility to overwrite the existing files; entering `n` (or anything other than `y`) instructs the utility to terminate without executing.

  In the latter case, you can either rename the existing folder before re-executing the utility, or you can execute the utility with a different folder name specified.
- Windows 8, Windows 10, and Windows Server 2012 R2 (x64) support User Account Control (UAC). Therefore, if you execute the `DLMgetras` utility as a user other than Administrator, execute it from the **Administrator: Command Prompt** window.

List of collected error information

The following table lists the types of error information collected in the target error information collection folder by the `DLMgetras` utility, which collects HDLM error information.

Table 7-1 List of error information collected by the `DLMgetras` utility for collecting error information

Directory that stores collected files#1	Files	Explanation
Just under the folder to which collected information is output	`getrasn.log`	The log file generated when `DLMgetras` is executed.
*folder-to-which-collected-information-is-output**HDLM-installation-destination-drive-name*\Program Files (x86)\HITACHI\DynamicLinkManagerForVMware#2	`hdlmversion`	HDLM version number
*folder-to-which-collected-information-is-output**HDLM-installation-destination-drive-name*\Program Files (x86)\HITACHI\DynamicLinkManagerForVMware\config#2	All files under `config`	HDLM settings file
*folder-to-which-collected-information-is-output**HDLM-installation-destination-drive-name*\Program Files (x86)\HITACHI	All files under `host`	Host settings file or log file

Directory that stores collected files#1	Files	Explanation
\DynamicLinkManagerForVMware\host#2		
*folder-to-which-collected-information-is-output**HDLM-installation-destination-drive-name*_\Program Files (x86)\HITACHI\DynamicLinkManagerForVMware\log#2	All files under log	HDLM log
Integrated trace file output folder specified in the Hitachi Network Objectplaza Trace Library utility (Default: *folder-to-which-collected-information-is-output**installation-destination-drive-name*_\Program Files (x86)#3\HITACHI\HNTRLib2\spool)	hntr*n*.log#4	Integrated trace file (HNTRLib2)
folder-to-which-collected-information-is-output\getrasinfo	application-list.txt	List of installation information
	dirHdlmRoot.txt	All the folders and the list of files in the HDLM installation destination folder
	dirSystemRoot.txt	All the folders and the list of files in the Windows installation destination folder
	dlmmgr-lic.txt	Result of the dlnkmgr -l view -sys -lic command
	dlmmgr-lu.txt	Result of the dlnkmgr view -lu -item pn cp type ic ie dnu slpr clpr lb vmpsp vmruntimename vmstate dpc command
	dlmmgr-lu-all.txt	Result of the dlnkmgr view -lu -item all command
	dlmmgr-path.txt	Result of the dlnkmgr view -path -hbaportwwn command
	dlmmgr-path-iem.txt	Result of the dlnkmgr view -path -iem command
	dlmmgr-path-item.txt	Result of the dlnkmgr view -path -item pn dn lu cp type ic ie dnu hd iep hbaportwwn vmruntimename vmstate vmpathuid command
	dlmmgr-sys.txt	System information for the host or remote management

Directory that stores collected files#1	Files	Explanation
		client, version information for HNTRLib (HNTRLib2) that is installed on the remote management client
	dlm-reg.txt	Contents of the HDLM registry
	esxcli.txt	Host information
	hntrlib-reg.txt	Contents of the HNTRLib registry
	path_environ.log	Environment variable Path information
	sysdllexe.txt	Version information, timestamps for PE format files, last modification dates, and file size information for executable files installed in the HDLM directory, HNTRLib2 directory, Hitachi common directory, and system directory.
	systeminfo.txt	System information
	wevApplication.evtx wevApplication.txt	Event log for applications
	wevSecurity.evtx wevSecurity.txt	Event log for security
	wevSetup.evtx wevSetup.txt	Event log for setup programs
	wevSystem.evtx wevSystem.txt	Event log for the system
	winmsd.txt	Windows system information
	dlmSatpModuleInfo.txt	HDLM SATP plug-in information
	dlmPspModuleInfo.txt	HDLM PSP plug-in information
folder-to-which-collected-information-is-output\hbsainfo	All files under hbsainfo	Error information of a Hitachi Command Suite product other than HDLM
*folder-to-which-collected-information-is-output**installation-destination-drive-name*_	hdlmvminst.log	HDLM installation log

#1

The target error information collection folder is created in the folder to which collected information is output. The user specifies the folder to

which collected information is output when executing the DLMgetras utility.

If you execute the `DLMgetras` utility without specifying the folder to which collected information is output, the default for the folder to which collected information is output is *`Windows-installation-destination-drive`*`\hdlmtemp\hdlmgetras` *`nn`*, where *nn* is a number from 00 to 99.

#2

The underlined part indicates the folder specified during installation

#3

For Windows 8 (x86), `Program Files (x86)` is `Program Files`.

#4

File names are created by using the value in the Hitachi Network Objectplaza Trace Library utility's `Output (folder and prefix)`, adding `2` onto the end, and then adding a file number onto the end of that. The default file names range from `hntr21.log` to `hntr216.log`. Note that `2` is part of the integrated trace file name and does not represent part of the file number.

The utility for creating HDLM Credential Store (dlmcreatecredstore)

This utility creates a Credential Store file used to link with Global Link Manager when the VMware PowerCLI is used.

To use the VMware PowerCLI, a Credential Store file used to link with Global Link Manager must be created by using the SYSTEM built-in account instead of the Windows login account. This utility executes the PowerShell script to create a Credential Store file by using the SYSTEM account. The Credential Store file will be stored in the following location:

`HDLM-installation-folder``\config\vicredentials.xml`

Format

Execute the `dlmcreatecredstore` utility in the command prompt of the Windows PowerShell.

`dlmcreatecredstore {-f "`*`path-name`*`" | -h}`

Parameters

`-f "`*`path-name`*`"`

Specify the absolute path of the Windows PowerShell script to be executed as a user with the permissions of the SYSTEM built-in account.

`-h`

Displays the format of the `dlmcreatecredstore` utility.

Notes

- Execute the `dlmcreatecredstore` utility in the command prompt of Windows PowerShell and, if the following message is output, perform the action described in KAPL20954-E.

```
Program 'dlmcreatecredstore.bat' failed to run: The process
cannot access the file because it is being used by another
process At line:1 char:1
+ .\dlmcreatecredstore.bat
+ ...
At line:1 char:1
+ .\dlmcreatecredstore.bat
+ ...
    + CategoryInfo          : ResourceUnavailable: (:) [],
ApplicationFailedException
    + FullyQualifiedErrorId : NativeCommandFailed
```

- If you execute multiple instances of the `dlmcreatecredstore` utility in the command prompt at the same time, the following message is output by the OS. However, this does not indicate a problem. Perform the action described in KAPL20954-E.

```
The process cannot access the file because it is being used by
another process.
```

The utility for displaying HDLM performance information (dlmperfinfo)

This utility collects performance information about the paths managed by the PSP provided by HDLM, and then displays the information or outputs it to a file.

If you obtain performance information before starting operation and again during operation, you can check the performance of each path by comparing the obtained information.

This utility is in the following locations:

HDLM-installation-folder\bin

Notes

- Paths for which the PSP provided by HDLM is set as the load balancing algorithm are displayed. Paths for which the VMware PSP is set are not displayed.

  If the load balancing algorithm is changed from the PSP provided by HDLM to the VMware PSP while the utility is running, the paths for which the PSP was changed will no longer be displayed. If the load balancing algorithms of all paths are changed to the VMware PSP, the acquisition of performance information will stop.

You can check whether the PSP provided by HDLM is used as the load balancing algorithm by using the following method.

If the following algorithms are displayed when `dlnkmgr view -lu -item lb` is executed:

- `exrr`: The Extended Round Robin algorithm
- `exlio`: The Extended Least I/Os algorithm
- `exlbk`: The Extended Least Blocks algorithm

- Do not concurrently execute the `dlmperfinfo` utility on the same ESXi host from multiple remote management clients.
- If you are using the function for displaying performance information, the amount of memory required by the HDLM driver on the ESXi host increases.

  The amount of additionally required memory is as follows:

  Amount of memory used by each path: 384 bytes

  Maximum amount of memory used: Amount of memory used by each path * the number of paths
- The amount of memory used by this utility on the ESXi host is as follows:

  7.0MB + (3000 bytes * the number of paths)
- The amount of memory used by this utility on the remote management clients is as follows:

  (7.0 MB + (3000 bytes * the number of paths)) * the number of times that the `dlmperfinfo` utility is concurrently executed
- Do not change the path configuration while the `dlmperfinfo` utility is running. If you change the path configuration, the processing to acquire performance information might stop.
- Execute the utility as a user who is a member of the Administrators group.

Format

Execute the `dlmperfinfo` utility in the command prompt of the VMware vSphere CLI or Windows PowerShell.

To collect performance information only once, or to specify the number of times to collect performance information

```
dlmperfinfo {[-s host-name] [-u user-name] [-p password] [-i
time-interval-for-collecting-performance-information] [-c count]
[-f CSV-file-name [-o]] [-a] [-t] | -h}
```

To collect performance information repeatedly until a user stops the utility

```
dlmperfinfo -c 0 {[-s host-name] [-u user-name] [-p password] [-i
time-interval-for-collecting-performance-information] [-f CSV-
```

file-name [-m *number-of-measurements-for-a-single-file*] [-r *total-number-of-files*]] [-a] [-t] | -h}

Parameters

-s *host-name*

Specify the name of the ESXi host from which the performance information is to be collected.

-u *user-name*

Specify the user name used to log in to the host.

-p *password*

Specify the password used to log in to the host.

-i *time-interval-for-collecting-performance-information*

Specify, in seconds, the time interval for which performance information is to be collected. Collection of performance information will start when the utility is executed and continue for the specified time interval. The collected information is then displayed. If you omit this parameter, the default value will be used.

- Default value: 300 (5 minutes)
- Minimum value: 60 (60 seconds)
- Maximum value: 3600 (1 hour)

-c *count*

Specify this parameter if you want to collect performance information multiple times for the time interval specified for the -i parameter. If you omit this parameter, the default value will be used.

If you specify 0, the utility will be executed in succession until the user stops the execution. To stop the utility, press **Ctrl+C** to terminate the processing.

- Default value: 1
- Minimum value: 0
- Maximum value: 1440

-f *CSV-file-name*

Specify this parameter to output the performance information to a CSV file. If you specify this parameter, performance information will not be output to the standard output.

If you specify 0 for the -c parameter, *_YYYYMMDDhhmmss.csv* will be added to the end of the name of the specified CSV file to which the performance information is to be output. *YYYYMMDDhhmmss* indicates the time (coordinated universal time) at which the file was created.

Example

If a CSV file is created at 09:30:00 (coordinated universal time) on April 01, 2018 by specifying -c 0 -f dlmperfinfo.csv, its file name will be as follows:

```
dlmperfinfo.csv_20180401093000.csv
```

`-o`

If the file specified for the `-f` parameter already exists, the file will be overwritten. If you omit this parameter, the file will not be overwritten, and processing will be canceled.

This parameter is valid when the `-f` parameter is specified.

If you specify `0` for the `-c` parameter, the file will always be overwritten regardless of whether the `-o` parameter is specified.

`-m` *`number-of-measurements-for-a-single-file`*

Specify the number of measurements to be output to a single CSV file. When the number of measurements reaches the specified value, a new CSV file will be created.

You can specify this parameter only when `0` is specified for the `-c` parameter.

- Default value: 60
- Minimum value: 1
- Maximum value: 1440

`-r` *`total-number-of-files`*

Specify the maximum for the total number of CSV files. When the total number of CSV files reaches the specified number, the oldest CSV file will be deleted.

You can specify this parameter only when `0` is specified for the `-c` parameter.

- Default value: 192
- Minimum value: 2
- Maximum value: 10000

`-a`

Specify this parameter to display all performance information items.

For details on the items that will be displayed, see *Table 7-2 Output information on page 7-13*.

`-t`

Specify this parameter if you do not want to display the performance information header.

`-h`

Displays the format of the `dlmperfinfo` utility.

Notes

You do not need to specify the `-s` parameter, `-u` parameter, or the `-p` parameter if the following environment variables are set for the remote management client.

- VI_SERVER: Host name
- VI_USERNAME: User name
- VI_PASSWORD: Password

If you omit the -u or -p parameter, the command will prompt you to enter a user name or password. In this case, enter the user name or password as directed.

Example

```
PROMPT>dlmperfinfo -i 300 -c 2
KAPL13031-I The utility for displaying HDLM performance information
(dlmperfinfo) will now start. Start time = 2018/01/30 10:06:45
Paths:000010
StartTime      : 2018/01/30 10:06:42
LDEV                   HDevName
Device          PathID Count_R/s Count_W/s MB_R/s MB_W/s Time_R
Time_W
VSP_G1500.51305.0018DB naa.60060e8007c869000030c869000018db
vmhba5:C0:T2:L0 000000        55        56 0.4328 0.4346 12985.5087
142.0632
VSP_G1500.51305.0018DB naa.60060e8007c869000030c869000018db
vmhba4:C0:T2:L0 000005        55        55 0.4329 0.4267 13156.0209
142.9028
VSP_G1500.51305.0018DC naa.60060e8007c869000030c869000018dc
vmhba5:C0:T2:L1 000001        55        55 0.4259 0.4329 12789.7337
143.5282
VSP_G1500.51305.0018DC naa.60060e8007c869000030c869000018dc
vmhba4:C0:T2:L1 000006        55        55 0.4279 0.4266 12781.8785
142.3092
VSP_G1500.51305.0018DD naa.60060e8007c869000030c869000018dd
vmhba5:C0:T2:L2 000002        55        55 0.4277 0.4292 11851.3004
141.9820
VSP_G1500.51305.0018DD naa.60060e8007c869000030c869000018dd
vmhba4:C0:T2:L2 000007        54        56 0.4235 0.4338 11884.3877
141.8465
VSP_G1500.51305.0018DE naa.60060e8007c869000030c869000018de
vmhba5:C0:T2:L3 000003        55        55 0.4268 0.4300 12102.8581
141.9302
VSP_G1500.51305.0018DE naa.60060e8007c869000030c869000018de
vmhba4:C0:T2:L3 000008        55        54 0.4292 0.4237 12087.8935
142.5772
VSP_G1500.51305.0018DF naa.60060e8007c869000030c869000018df
vmhba5:C0:T2:L4 000004        55        55 0.4298 0.4270 12829.5912
142.2004
VSP_G1500.51305.0018DF naa.60060e8007c869000030c869000018df
vmhba4:C0:T2:L4 000009        55        55 0.4325 0.4295 12758.5890
142.4893
StartTime      : 2018/01/30 10:11:43
LDEV                   HDevName
Device          PathID Count_R/s Count_W/s MB_R/s MB_W/s Time_R
Time_W
VSP_G1500.51305.0018DB naa.60060e8007c869000030c869000018db
vmhba5:C0:T2:L0 000000        71        71 0.5554 0.5545 23327.7764
478.7091
VSP_G1500.51305.0018DB naa.60060e8007c869000030c869000018db
vmhba4:C0:T2:L0 000005        71        71 0.5558 0.5566 23257.3585
391.1462
```

```
VSP_G1500.51305.0018DC naa.60060e8007c869000030c869000018dc
vmhba5:C0:T2:L1 000001        71        70 0.5513 0.5473 23043.4960
403.7159
VSP_G1500.51305.0018DC naa.60060e8007c869000030c869000018dc
vmhba4:C0:T2:L1 000006        70        70 0.5486 0.5480 23209.3898
436.0951
VSP_G1500.51305.0018DD naa.60060e8007c869000030c869000018dd
vmhba5:C0:T2:L2 000002        70        71 0.5503 0.5538 22094.9779
423.9245
VSP_G1500.51305.0018DD naa.60060e8007c869000030c869000018dd
vmhba4:C0:T2:L2 000007        70        70 0.5472 0.5441 22423.5677
423.3897
VSP_G1500.51305.0018DE naa.60060e8007c869000030c869000018de
vmhba5:C0:T2:L3 000003        71        70 0.5519 0.5485 21949.5193
350.6774
VSP_G1500.51305.0018DE naa.60060e8007c869000030c869000018de
vmhba4:C0:T2:L3 000008        70        70 0.5500 0.5495 22109.0618
361.3867
VSP_G1500.51305.0018DF naa.60060e8007c869000030c869000018df
vmhba5:C0:T2:L4 000004        71        71 0.5547 0.5507 22659.6808
361.7437
VSP_G1500.51305.0018DF naa.60060e8007c869000030c869000018df
vmhba4:C0:T2:L4 000009        71        70 0.5510 0.5505 22857.1361
384.1746
KAPL13032-I The utility for displaying HDLM performance information
(dlmperfinfo) finished. End time = 2018/01/30 10:16:50
```

Displayed performance information

When you execute the `dlmperfinfo` utility, the following information is displayed.

- Number of I/Os
- I/O transfer amount
- I/O response time
- Number of I/Os and I/O blocks that are being processed

The following table provides details about the displayed information.

Table 7-2 Output information

Item	Description
`Paths`	Number of paths that are managed by the PSP provided by HDLM and that to be measured at the start of performance measurement. If the load balancing algorithm is changed during performance measurement, the value displayed for this item might not match the actual number of path information items that are displayed. If the `-t` parameter was specified, this item is not output.
`StartTime`	Time when performance measurement started.#1 This item is output as many times as the value specified for the `-c` parameter. This item is displayed only in the console window.

Item	Description
UTC	Coordinated universal time. #2 This item is output in *YYYYMMDD*T*hhmmss* format. Example: 20170707T123000 If the -f parameter was specified, this item is output to the CSV file.
Date	Date (year, month, and date) when measurement started.#1 This item is output in *YYYYMMDD* format. Example: 20170707 If the -f parameter was specified, this item is output to the CSV file.
Time	Time (hour, minute, second) when measurement started.#1 This item is output in *hhmmss* format. If the -f parameter was specified, this item is output to the CSV file.
LDEV	Information about LDEVs. The model ID, serial number, and iLU number for the storage system, separated by periods. This item is always output.
HDevName	ESXi host device name. This item is always output.
Device	The runtime name of the path managed by VMware vSphere is displayed.
PathID	The AutoPATH_ID. This item is always output.
PathName	The path name. If the -a parameter was specified, this item is output.
HBAPortWWN	Port WWN information of the HBAs. If the -a parameter was specified, this item is output.
ChaPort	Port number of the CHA If the -a parameter was specified, this item is output.
Status	Status of the path. If the -a parameter was specified, this item is output.
Count_R/s	Number of read I/Os per second. Unit: number of I/Os This item is always output.
Count_W/s	Number of write I/Os per second. Unit: number of I/Os This item is always output.
Count_R/s-Rnd	Number of random read I/Os per second.

Item	Description
	Unit: number of I/Os If the -a parameter was specified, this item is output.
Count_R/s-Seq	Number of sequential read I/Os per second. Unit: number of I/Os If the -a parameter was specified, this item is output.
Count_W/s-Rnd	Number of random write I/Os per second. Unit: number of I/Os If the -a parameter was specified, this item is output.
Count_W/s-Seq	Number of sequential write I/Os per second. Unit: number of I/Os If the -a parameter was specified, this item is output.
MB_R/s	Amount of data handled by read I/Os per second. Unit: MB This item is always output.
MB_W/s	Amount of data handled by write I/Os per second. Unit: MB This item is always output.
MB_R/s-Rnd	Amount of data handled by random read I/Os per second. Unit: MB If the -a parameter was specified, this item is output.
MB_R/s-Seq	Amount of data handled by sequential read I/Os per second. Unit: MB If the -a parameter was specified, this item is output.
MB_W/s-Rnd	Amount of data handled by random write I/Os per second. Unit: MB If the -a parameter was specified, this item is output.
MB_W/s-Seq	Amount of data handled by sequential write I/Os per second. Unit: MB If the -a parameter was specified, this item is output.
Time_R	Average response time of read I/Os. Unit: Microsecond#3 This item is always output.
Time_W	Average response time of write I/Os. Unit: Microsecond#3 This item is always output.
Time_R-Rnd	Average response time of random read I/Os. Unit: Microsecond#3

Item	Description
	If the -a parameter was specified, this item is output.
Time_R-Seq	Average response time of sequential read I/Os. Unit: Microsecond#3 If the -a parameter was specified, this item is output.
Time_W-Rnd	Average response time of random write I/Os. Unit: Microsecond#3 If the -a parameter was specified, this item is output.
Time_W-Seq	Average response time of sequential write I/Os. Unit: Microsecond#3 If the -a parameter was specified, this item is output.
Max-Time_R	Maximum response time of read I/Os. Unit: Microsecond#3 If the -a parameter was specified, this item is output.
Max-Time_W	Maximum response time of write I/Os. Unit: Microsecond#3 If the -a parameter was specified, this item is output.
Max-Time_R-Rnd	Maximum response time of random read I/Os. Unit: Microsecond#3 If the -a parameter was specified, this item is output.
Max-Time_R-Seq	Maximum response time of sequential read I/Os. Unit: Microsecond#3 If the -a parameter was specified, this item is output.
Max-Time_W-Rnd	Maximum response time of random write I/Os. Unit: Microsecond#3 If the -a parameter was specified, this item is output.
Max-Time_W-Seq	Maximum response time of sequential write I/Os. Unit: Microsecond#3 If the -a parameter was specified, this item is output.
Count_Error	Number of I/O errors. Unit: number of I/Os If the -a parameter was specified, this item is output. Notes ○ The total number of I/O errors during the time interval for which performance information was collected is output. ○ The number of I/O errors includes both read I/O errors and write I/O errors.
Time_Error	Average response time of I/O errors. Unit: Microsecond#3

Item	Description
	If the -a parameter was specified, this item is output. Note ○ The I/O error response time includes the response times for both read I/Os and write I/Os.
QueuedIO	Average number of I/Os being processed if a path was selected. Unit: number of I/Os If the -a parameter was specified, this item is output.
QueuedMB	Average amount of data handled by the I/Os being processed if a path was selected. Unit: MB If the -a parameter was specified, this item is output.
Max-QueuedIO	Maximum number of I/Os being processed if a path was selected. Unit: number of I/Os If the -a parameter was specified, this item is output.
Max-QueuedMB	Maximum amount of data handled by the I/Os being processed if a path was selected. Unit: MB If the -a parameter was specified, this item is output.

#1

The time on the ESXi host from which performance information is collected is displayed in the time zone of the remote management client.

#2

The time of the ESXi host from which performance information is collected

#3

The response time is accurate up to the nanosecond.

Outputting a CSV file

If the -f parameter is specified for the dlmperfinfo utility, performance information will be output to the specified file#. The output item names and values are enclosed in double quotation marks (") and delimited by commas (CSV format). For details on the information that is output, see *Table 7-2 Output information on page 7-13*.

#

If you specify 0 for the -c parameter, *_YYYYMMDDhhmmss.csv* will be added to the end of the name of the specified CSV file to which the performance information is to be output. *YYYYMMDDhhmmss* indicates the time (coordinated universal time) at which the file was created.

An example of an output CSV file is provided below.

Example: Executing the utility

```
PROMPT>dlmperfinfo -i 300 -c 2 -f CSV-file-name
KAPL13031-I The utility for displaying HDLM performance information
(dlmperfinfo) will now start. Start time = 2018/01/30 10:23:01
KAPL13047-I Performance information is now being measured. (1 / 2)
KAPL13047-I Performance information is now being measured. (2 / 2)
KAPL13032-I The utility for displaying HDLM performance information
(dlmperfinfo) finished. End time = 2018/01/30 10:33:08
```

Example: Outputting a CSV file

```
[Paths:000010]
"UTC","Date","Time","LDEV","HDevName","Device","PathID","Count_R/
s","Count_W/s","MB_R/s","MB_W/s","Time_R","Time_W"
"20180130T012259","20180130","102259","VSP_G1500.51305.0018DB","naa.
60060e8007c869000030c869000018db","vmhba5:C0:T2:L0","000000","81","81
","0.6318","0.6347","9011.6460","37209.7003"
"20180130T012259","20180130","102259","VSP_G1500.51305.0018DB","naa.
60060e8007c869000030c869000018db","vmhba4:C0:T2:L0","000005","80","80
","0.6261","0.6227","9083.4744","38294.6907"
"20180130T012259","20180130","102259","VSP_G1500.51305.0018DC","naa.
60060e8007c869000030c869000018dc","vmhba5:C0:T2:L1","000001","80","81
","0.6241","0.6308","8922.5831","37390.2871"
"20180130T012259","20180130","102259","VSP_G1500.51305.0018DC","naa.
60060e8007c869000030c869000018dc","vmhba4:C0:T2:L1","000006","79","80
","0.6148","0.6284","8986.0022","37786.5791"
"20180130T012259","20180130","102259","VSP_G1500.51305.0018DD","naa.
60060e8007c869000030c869000018dd","vmhba5:C0:T2:L2","000002","80","80
","0.6287","0.6266","8436.6889","37635.3885"
"20180130T012259","20180130","102259","VSP_G1500.51305.0018DD","naa.
60060e8007c869000030c869000018dd","vmhba4:C0:T2:L2","000007","81","81
","0.6333","0.6334","8459.9504","37201.2305"
"20180130T012259","20180130","102259","VSP_G1500.51305.0018DE","naa.
60060e8007c869000030c869000018de","vmhba5:C0:T2:L3","000003","81","81
","0.6351","0.6322","8489.2845","36926.0651"
"20180130T012259","20180130","102259","VSP_G1500.51305.0018DE","naa.
60060e8007c869000030c869000018de","vmhba4:C0:T2:L3","000008","80","80
","0.6271","0.6242","8671.4918","37798.9948"
"20180130T012259","20180130","102259","VSP_G1500.51305.0018DF","naa.
60060e8007c869000030c869000018df","vmhba5:C0:T2:L4","000004","80","80
","0.6248","0.6259","8900.8976","37798.5714"
"20180130T012259","20180130","102259","VSP_G1500.51305.0018DF","naa.
60060e8007c869000030c869000018df","vmhba4:C0:T2:L4","000009","80","81
","0.6279","0.6293","8835.6986","37573.8684"
"UTC","Date","Time","LDEV","HDevName","Device","PathID","Count_R/
s","Count_W/s","MB_R/s","MB_W/s","Time_R","Time_W"
"20180130T012800","20180130","102800","VSP_G1500.51305.0018DB","naa.
60060e8007c869000030c869000018db","vmhba5:C0:T2:L0","000000","57","57
","0.4445","0.4473","4942.6197","44990.4660"
"20180130T012800","20180130","102800","VSP_G1500.51305.0018DB","naa.
60060e8007c869000030c869000018db","vmhba4:C0:T2:L0","000005","58","57
","0.4494","0.4488","5014.8296","44584.9826"
"20180130T012800","20180130","102800","VSP_G1500.51305.0018DC","naa.
60060e8007c869000030c869000018dc","vmhba5:C0:T2:L1","000001","57","57
","0.4467","0.4475","4819.6935","44006.9543"
"20180130T012800","20180130","102800","VSP_G1500.51305.0018DC","naa.
60060e8007c869000030c869000018dc","vmhba4:C0:T2:L1","000006","57","57
","0.4482","0.4416","4974.5097","44351.8290"
```

```
"20180130T012800","20180130","102800","VSP_G1500.51305.0018DD","naa.
60060e8007c869000030c869000018dd","vmhba5:C0:T2:L2","000002","57","57
","0.4482","0.4446","4419.2443","46354.0727"
"20180130T012800","20180130","102800","VSP_G1500.51305.0018DD","naa.
60060e8007c869000030c869000018dd","vmhba4:C0:T2:L2","000007","57","57
","0.4457","0.4473","4211.0663","46420.4548"
"20180130T012800","20180130","102800","VSP_G1500.51305.0018DE","naa.
60060e8007c869000030c869000018de","vmhba5:C0:T2:L3","000003","57","56
","0.4459","0.4378","4418.7220","45914.6904"
"20180130T012800","20180130","102800","VSP_G1500.51305.0018DE","naa.
60060e8007c869000030c869000018de","vmhba4:C0:T2:L3","000008","58","57
","0.4518","0.4479","4489.2659","44575.4774"
"20180130T012800","20180130","102800","VSP_G1500.51305.0018DF","naa.
60060e8007c869000030c869000018df","vmhba5:C0:T2:L4","000004","57","57
","0.4432","0.4416","4836.3489","45351.2729"
"20180130T012800","20180130","102800","VSP_G1500.51305.0018DF","naa.
60060e8007c869000030c869000018df","vmhba4:C0:T2:L4","000009","57","57
","0.4452","0.4487","4721.8893","44742.1729"
```

Note

- If you specify `0` for the `-c` parameter, the utility will be executed in succession until the user stops the execution. To stop the utility, press **Ctrl+C** to terminate the processing.
- Before outputting a CSV file, calculate the necessary disk capacity by using the following formula to ensure that there is sufficient space on the disk to which the CSV file is to be output. In addition, delete CSV files that are no longer required.
  - When `0` is specified in the `-c` parameter:
    - When the `-a` parameter is specified:

      1025 bytes * ((*number-of-paths* + 1) * *value-specified-for-the-m-parameter*) + 1 * *value-specified-for-the-r-parameter* (bytes)
    - When the `-a` parameter is not specified:

      671 bytes * ((*number-of-paths* + 1) * *value-specified-for-the-m-parameter*) + 1 * *value-specified-for-the-r-parameter* (bytes)
  - When `0` is not specified in the `-c` parameter:
    - When the `-a` parameter is specified:

      1025 bytes * ((*number-of-paths* + 1) * *value-specified-for-the-c-parameter* + 1) (bytes)
    - When the `-a` parameter is not specified:

      671 bytes * ((*number-of-paths* + 1) * *value-specified-for-the-c-parameter* + 1) (bytes)

  Example 1: When collecting performance information 288 times with the `-a` parameter specified in an environment with 2,048 paths

  When `dlmperfinfo -c 288 -f CSV-file-name -a` is executed, the file size is as follows:

  1025 * ((2048 + 1) * 288 + 1) = 604865825 (bytes) (approx. 577MB)

Example 2: When collecting files for one year by assuming that the data collected in intervals of one minute in a single day is one file, with the `-a` parameter specified in an environment with 500 paths

The `-m` parameter is calculated as follows: 60 minutes * 24 hours = 1440, and the `-r` parameter is calculated as follows: the number of days in a year + 1 = 366. Therefore, when `dlmperfinfo -i 60 -c 0 -f CSV-file-name -m 1440 -r 366 -a` is executed, the file size is as follows:

1025 * (500 + 1) * (1440+1) * 366 = 270836166150 (bytes) (approx. 252.2 GB)

Example 3: When keeping the total size of files to no more than 2 TB by assuming the number of measurements for a single file to be 1,440, with the `-a` parameter specified in an environment with the 1,000 paths

Value of the `-r` parameter = $2 * 1024^4 / (1025 * 1001 * 1441) \approx 1487.3$ (files)

This means that you can create up to 1,487 files to keep the total size of the files to no more than 2 TB, and `dlmperfinfo -c 0 -f CSV-file-name -m 1440 -r 1487 -a` can be executed.

- Use the following formula to obtain the number of lines to be output in a CSV file. Calculate the number of lines to be output in a single file to adjust the number of measurements.
  - When `0` is specified in the `-c` parameter:

    (*number-of-paths* + 1) * *value-specified-for-the-m-parameter* + 1

    Note that, if you execute the utility with the `-t` parameter specified to hide the header, the number of lines will be as follows:

    number-of-paths * *value-specified-for-the-m-parameter*
  - When `0` is not specified in the `-c` parameter:

    (*number-of-paths* + 1) * *value-specified-for-the-c-parameter* + 1

    Note that, if you execute the utility with the `-t` parameter specified to hide the header, the number of lines will be as follows:

    number-of-paths * *value-specified-for-the-c-parameter*

Example 1: The number of lines when the results for 500 measurements are output in a single file by hiding the header in an environment with 500 paths

(500 + 0) * 500 + 0 = 250000 (lines)

Example 2: The number of measurements that keeps the number of lines to no more than 1048576, including the header, in an environment with 1000 paths

(1048576 - 1) / (1000 + 1) ≈ 1047.5 (times)

This means that the results for up to 1,047 measurements can be output to a single file.

The dlmrmcenv utility for configuring HDLM remote management client environments

This utility configures the operating environments of remote management clients.

You can configure the following settings related to operating environments:

- Specify the CLI to be used to acquire host information.
- Specify the name of the user account of the ESXi host used to link with Global Link Manager.
- Specify the Credential Store file to be used to link with Global Link Manager (when using the VMware vSphere CLI).#

To execute the `dlmrmcenv` utility, the Credential Store file must already be on the remote management client#.

#

The Credential Store file stores information about the ESXi host (host name, user name, and password).

To use the VMware vSphere CLI, create a Credential Store file in advance, and specify that file that for the `--credstore` parameter.

The default storage location of the Credential Store file is as follows:

```
%APPDATA%\VMware\credstore\vicredentials.xml
```

If you want to use the VMware PowerCLI, use the `dlmcreatecredstore` utility to create a Credential Store file. You do not need to specify the created Credential Store file in the `--credstore` parameter.

Format

Execute the `dlmrmcenv` utility in the command prompt of the VMware vSphere CLI or Windows PowerShell.

```
dlmrmcenv {[--username "user-name"] [--credstore "Credential-Store-file-path"] | --cli { vCLI | PowerCLI} | --output | -h}
```

Parameters

`--username "user-name"`

Specifies the name of the user account that was created on the host.

If the name of the user account that was created is `GLMUser`, this parameter can be omitted.

`--credstore "Credential-Store-file-path"`

Specifies the path of the Credential Store file that is stored on the remote management client.

If the Credential Store file is stored in the default folder, this parameter can be omitted.

`--cli { vCLI | PowerCLI}`

Specifies the CLI to be used for acquiring host information.

`vCLI`

Uses the VMware vSphere CLI.

`PowerCLI`

Uses the VMware PowerCLI.

`--output`

Displays the name of the user account that is registered on the remote management client, as well as the Credential Store file path. This parameter also displays the CLI to be used for acquiring host information.

Example:

```
PROMPT>dlmrmcenv --output
ESXiUserName=GLMUser
CredentialStoreFilePath="C:\Documents and Settings\xxxxxxxx
\Application Data\VMware\credstore\vicredentials.xml"
CliInterface=vCLI
KAPL20907-I The dlmrmcenv utility completed normally.
PROMPT>
```

`-h`

Displays the format for running the `dlmrmcenv` utility.

Note

If you used the `dlmrmcenv` utility to change settings related to the user account or to the Credential Store file, restart the following services for the settings to take effect.

- Services of the HDLM manager
- Services of Hitachi Command Suite Common Agent Component

To restart these services, perform the following procedure.

1. Restart the services of the HDLM manager.

   From **Control Panel**, choose **Administrative Tools** and then **Services** to open the Services window.

   From the list of services, select **DLMManagerVM**. Then, from the **Action** menu, choose **Restart** to restart the service.

2. Restart the services of Hitachi Command Suite Common Agent Component.

   After executing the `hbsasrv` to stop the services, restart the services.

   For details about the `hbsasrv` command, see *Starting and stopping Hitachi Command Suite Common Agent Component* in the manual *Hitachi Global Link Manager Installation and Configuration Guide*.

The installhdlm utility for installing HDLM

The `installhdlm` utility can perform a new installation, upgrade installation, or re-installation of HDLM in the unattended installation mode. How the utility should respond during an installation, and the HDLM function settings must be predefined in an installation-information settings file.

You can also use this utility later to check the information that was set during installation.

The utility is stored in the following location:

drive-containing-installation-DVD-ROM:\HDLM_VMware\DLMTools

For details about the procedure for performing an unattended installation, see *Unattended installation on remote management client on page 3-15*.

Format

```
installhdlm {-f installation-information-settings-file-name | -v
| -h}
```

Parameters

-f *installation-information-settings-file-name*

Sets the information required to perform an installation.

For details about the installation-information settings file, see Contents of an installation-information settings file on page 7-23.

-v

Displays the information that was set during installation.

If the installation was performed without using the unattended installation functionality, the information specified in a dialog box is displayed.

Example:

```
PROMPT>installhdlm -v
installdir=C:\Program Files (x86)\HITACHI
\DynamicLinkManagerforVMware
PROMPT>
```

For an explanation of each display item, see *Table 7-3 Keys that can be defined in the [INSTALLATION_SETTINGS] section on page 7-24*.

-h

Displays the format of the `installhdlm` utility.

Contents of an installation-information settings file

For information about setting the installation-information settings file, see *Unattended installation on remote management client on page 3-15*.

[INSTALLATION_SETTINGS] section

This section defines operation information for the installhdlm utility. Do not modify any definitions of items that are not listed in *Table 7-3 Keys that can be defined in the [INSTALLATION_SETTINGS] section on page 7-24*.

The following table lists and describes the keys defined in the [INSTALLATION_SETTINGS] section.

Table 7-3 Keys that can be defined in the [INSTALLATION_SETTINGS] section

Key name	Description	Necessity of definition		Maximum character length#1
		New installation	Upgrade installation or re-installation	
installfile_location	Specify the absolute path name of the drive in which the installation DVD-ROM is inserted. If this key is omitted, the installer uses the following folder: *drive-containing-installation-DVD-ROM*:\HDLM_VMware	Optional	Optional	100
workdir	Specify an absolute path to an output folder. Installation logs and processing files are output to this folder.#2, #3 If this key is omitted, the installer uses the folder path that has been defined in the TMP or TEMP environment variable.	Optional	Optional	100
licensekeyfile	Specify an absolute path to a license key file stored on the remote management client.#2, #3 If this key is omitted, the installer uses the following license key file: *Windows-installation-drive*:\hdlm_license	Optional #4	Optional #4	100
installdir	Specify an absolute path to an installation destination folder for HDLM.#2, #3 If this key is omitted, the installer uses the following folder: *Windows-installation-drive*:\Program Files (x86)\HITACHI\DynamicLinkManagerforVMware#5	Optional	Not required	100

Legend:

Optional: If no key or setting value is specified, the installer uses the default value.

Not required: The specification of any key or setting value is unnecessary. If a key or setting value is specified for the key, the installer ignores the specified value.

#1

If a value exceeds the maximum length, an error will occur.

#2

If a value is not of an allowable type, an error will occur.

#3

The value to be specified does not have to be enclosed within double quotation marks (`"`), even if the value includes space characters.

#4

When you perform a new installation of HDLM, or when you perform an upgrade installation and the license is expired, you must prepare the license key file.

#5

In Windows 8 (x86), the installer uses the following folder:

Windows-installation-drive`:\Program Files\HITACHI\DynamicLinkManagerforVMware`

The following shows an example of an installation-information settings file.

```
[INSTALLATION_SETTINGS]
installfile_location=
workdir=
licensekeyfile=C:\temp\hdlm_license
installdir=D:\Program Files (x86)\HITACHI\DynamicLinkManagerforVMware
```

Notes

- If a hash mark (`#`) is placed at the beginning of a line in the installation-information settings file, that line is assumed to be a comment.
- If you do not want to specify a key or setting value, enter a hash mark (`#`) at the beginning of that particular line.

About the log file

During an unattended installation, information about the installation progress is output to the log file named `installhdlm.log`.

The following explains the `installhdlm.log` file:

- The `installhdlm.log` file is created in the folder specified by the `workdir` key in the installation-information settings file.

- If the `installhdlm.log` file already exists, log data will be appended to the file. For details about the capacity of the log output folder, see *Unattended installation on remote management client on page 3-15*.

Notes

- The `installhdlm.log` file is not deleted when HDLM is removed. If the file is no longer necessary, delete it manually.
- Creation of the `installhdlm.log` file might fail if, for example, the disk does not have sufficient unused capacity. If this happens, a message will be output immediately before the `installhdlm` utility terminates.

The removehdlm utility for removing HDLM

The `removehdlm` utility removes HDLM. If you execute the `removehdlm` utility with the `-s` parameter specified, no dialog boxes will be displayed during an unattended removal.

Format

```
removehdlm [-s | -h]
```

Parameters

`-s`

Executes an unattended removal.

`-h`

Displays the format of the `removehdlm` utility.

If you execute the `removehdlm` utility without any parameters specified, dialog boxes will appear, such as those providing notes on removal and indicating the completion of the removal.

Notes

- After the `removehdlm` utility has been executed and the remote management client restarted, the utility is automatically deleted.
- After executing the `removehdlm` utility, check the messages output to the command prompt and the `hdlmvmuninst.log` file to make sure that HDLM has been removed. The `hdlmvmuninst.log` file is output directly under the drive on which Windows is installed.

8

Messages

This chapter describes the format and meaning of the message IDs, and also the terms used in the messages and message explanations. For details on the meaning of the return codes output by HDLM when it receives a request from Global Link Manager and measures to take for them, see *Return codes for Hitachi Command Suite Common Agent Component on page 8-76*.

Before viewing the list of messages

This section explains the following information that is needed to locate messages and understand the explanations in the sections from *KAPL01001 to KAPL02000 on page 8-3*.

- Format and meaning of the message IDs
- Terms used in the messages and message explanations

The information is explained below.

Format and meaning of message IDs

Each message has a message ID. The following table shows the format and meaning of message IDs.

Table 8-1 Format and meaning of the message ID KAPL*nnnnn-l*

Format	Meaning
`KAPL`	Indicates that the message is an HDLM message.
nnnnn	Message serial number for the module
l	Message level • `C`: Critical Fatal errors that may stop the system. • `E`: Error Errors that adversely affect the system. This type of error can be avoided by performing a failover or other countermeasures. • `W`: Warning Errors that enable the system to continue but, if left, might cause the system to improperly operate. • `I`: Information Information that simply indicates the operating history when the system is operating normally.

Terms used in messages and message explanations

The following table shows the terms that appear in messages and the terms that are used for explanation (meaning, description, and handling) of the messages.

Table 8-2 Terms used in the messages and message explanations

Terms	Meaning
aa...aa	Variable (If a message contains two or more variables, they are displayed as *bb...bb*, *cc...cc*, and so on.)
Operation name	The operation name that is input after `dlnkmgr` in the command.

KAPL01001 to KAPL02000

Message ID	Message Text	Explanation
KAPL01001-I	The HDLM command completed normally. Operation name = *aa...aa*, completion time = *bb...bb*	Details The HDLM command completed successfully. When the `view -path`, or `view -lu` operation is executed, `view(-pstv)` is displayed if the Physical Storage View is disabled, and `view(-vstv)` is displayed if the Physical Storage View is disabled. *aa...aa*: Specified operation name *bb...bb*: Year/month/day hour:minute:second Action None.
KAPL01002-I	The HDLM command started. Operation name = *aa...aa*	Details The HDLM command was executed. *aa...aa*: Specified operation name Action None.
KAPL01003-W	No operation name is specified.	Details An operation name is missing. Action Specify the operation name, and then retry.
KAPL01004-W	The operation name is invalid. Operation name = *aa...aa*	Details *aa...aa*: Specified operation name Action Execute the `help` operation of the HDLM command (`dlnkmgr`) to check the operation name, and then retry. For details on the `help` operation, see *help (displays the operation format) on page 6-5*.
KAPL01005-W	A parameter is invalid. Operation name = *aa...aa*, parameter = *bb...bb*	Details *aa...aa*: Specified operation name *bb...bb*: Specified parameter Action Execute `help` *operation-name* of the HDLM command (`dlnkmgr`) to check the parameter, and then retry. For details on the `help` operation, see *help (displays the operation format) on page 6-5*.

Message ID	Message Text	Explanation
KAPL01006-W	A necessary parameter is not specified. Operation name = *aa...aa*	Details The specified operation does not contain the necessary parameter. *aa...aa*: Specified operation name Action Execute `help` *operation-name* of the HDLM command (`dlnkmgr`) to check the parameter. Specify the correct parameter, and then retry. For details on the `help` operation, see *help (displays the operation format) on page 6-5*.
KAPL01007-W	A duplicate parameter is specified. Operation name = *aa...aa*, parameter = *bb...bb*	Details *aa...aa*: Specified operation name *bb...bb*: Duplicate parameter Action Delete the duplicate parameter, and then retry.
KAPL01008-W	A necessary parameter value is not specified. Operation name = *aa...aa*, parameter = *bb...bb*	Details *aa...aa*: Specified operation name *bb...bb*: Parameter name Action Specify the parameter value, and then retry.
KAPL01009-W	A parameter value is invalid. Operation name = *aa...aa*, parameter = *bb...bb*, parameter value = *cc...cc*, Valid value = *dd...dd*	Details *aa...aa*: Specified operation name *bb...bb*: Parameter name *cc...cc*: Specified parameter value *dd...dd*: Specifiable parameter value range Action Specify a correct value for the parameter, and then retry.
KAPL01013-E	An error occurred in internal processing of the HDLM command. Operation name = *aa...aa* details = *bb...bb*	Details An error unrelated to a user operation occurred during command processing. *aa...aa*: Specified operation name *bb...bb*: The name of the function and processing on which the error occurred Action Execute the `DLMgetras` utility for collecting HDLM error information, and then contact your HDLM vendor or the maintenance

Message ID	Message Text	Explanation
		company if there is a maintenance contract for HDLM. For details on the `DLMgetras` utility, see *The DLMgetras utility for collecting HDLM error information on page 7-2*.
KAPL01014-W	No authority to execute the HDLM command. Operation name = *aa...aa*	Details You do not have the administrator permissions necessary to execute the HDLM command. *aa...aa*: Specified operation name Action Execute the command as a user with Administrators group permissions.
KAPL01016-W	The target CHA port was not found. Operation name = *aa...aa*	Details The path ID indicated by `-pathid` and required by the `-cha` parameter is not an object of HDLM management. *aa...aa*: `offline` or `online` Action Execute the `view` operation of the HDLM command (`dlnkmgr view -path`), and then check the value displayed in `ChaPort`. Specify an AutoPath_ID that passes through the relevant CHA port, and then retry. For details on the `view` operation, see *view (displays information) on page 6-24*.
KAPL01018-W	The target device was not found. Operation name = *aa...aa*	Details The specified host device name could not be found. *aa...aa*: `view` Action Execute the `view` operation of the HDLM command (`dlnkmgr view -path`) to check the value displayed in `HDevName`. Specify a host device for the value of `HDevName`, and then retry. For details on the `view` operation, see *view (displays information) on page 6-24*.
KAPL01019-W	The target path was not found. Operation name = *aa...aa*	Details *aa...aa*: `offline`, `online`, or `view` ○ `offline`/`online` operation

Message ID	Message Text	Explanation
		The specified path does not exist. ○ `view` operation The paths have not been configured because creation of the HDLM environment or configuration changes to the HDLM operating environment have not finished. Action ○ `offline`/`online` operation Use the `view` operation of the HDLM command (`dlnkmgr`) to check the settings, and then retry. For details on the `view` operation, see *view (displays information) on page 6-24*. ○ `view` operation Refer to *Chapter 3, Creating an HDLM environment on page 3-1*. *Creating an HDLM Environment*, and then configure any paths that exist. If the same message appears again, execute the `DLMgetras` utility for collecting HDLM error information, acquire the error information, and then contact your HDLM vendor or the company for which you have a service contract. For details on the `DLMgetras` utility, see *The DLMgetras utility for collecting HDLM error information on page 7-2*.
KAPL01021-E	Cannot execute the HDLM command due to insufficient memory.	Details Memory required for HDLM command processing could not be allocated. Action Terminate unnecessary applications to increase the amount of free memory, and then try again.
KAPL01024-W	The specified parameters cannot be specified at the same time. Operation name = *aa...aa*, parameters = *bb...bb*	Details *aa...aa*: Specified operation name *bb...bb*: Parameters that cannot be specified at the same time Action

Message ID	Message Text	Explanation
		Execute `help` *operation* of the HDLM command (`dlnkmgr`) to check which parameters can be specified at the same time, and then retry. For details on the `help` operation, see *help (displays the operation format) on page 6-5*.
KAPL01036-E	The Offline path cannot be placed online. PathID = *aa...aa*	Details The path could not be recovered. *aa...aa*: Path ID (decimal (base-10) number) Action Remove the error in the path, and then retry.
KAPL01039-W	During the online operation processing of the HDLM command, a path that cannot be placed in the Online status was detected. PathID = *aa...aa* Would you like to continue the processing of the online operation? [y/n]:	Details A path that cannot be placed `Online` was detected during multi-path online processing. To ignore this path and perform online processing for the next path, enter `y`. To cancel processing, enter `n`. *aa...aa*: Path ID (decimal (base-10) number) Action If you want to continue processing of the `online` operation of the HDLM command for other paths, enter `y`. If you want to terminate processing, enter `n`. For details on the `online` operation, see *online (places paths online) on page 6-10*.
KAPL01040-W	The entered value is invalid. Re-enter [y/n]:	Details A value other than y and n was entered. Enter `y` or `n`. Action Enter `y` or `n`.
KAPL01041-E	The entered value is invalid. The operation stops. Operation name = *aa...aa*	Details Command processing will be aborted because an incorrect value was entered three times in a row for a request. *aa...aa*: `clear`, `offline`, `online`, or `set` Action Check the correct value, and then re-execute the HDLM command.

Message ID	Message Text	Explanation
KAPL01044-W	A duplicate parameter value is specified. Operation name = *aa...aa*, parameter = *bb...bb*, parameter value = *cc...cc*	Details The same parameter value is specified two or more times. *aa...aa*: `view` *bb...bb*: Parameter name *cc...cc*: Duplicate parameter value Action Delete the duplicate parameter value, and then retry.
KAPL01045-W	Too many parameter values are specified. Operation name = *aa...aa*, parameters = *bb...bb*, parameter value = *cc...cc*	Details *aa...aa*: `offline`, `online`, `set`, or `view` *bb...bb*: Parameter name *cc...cc*: Parameter value Action Execute `help` *operation-name* of the HDLM command (`dlnkmgr`) to check the parameter value, and then retry. For details on the `help` operation, see *help (displays the operation format) on page 6-5*.
KAPL01048-W	Help information cannot be found. Operation name = *aa...aa*.	Details The specified operation is not an operation of the HDLM command. *aa...aa*: Specified operation name Action Use the `help` operation of the HDLM command (`dlnkmgr`) to check the operation name. And then retry. For details on the `help` operation, see *help (displays the operation format) on page 6-5*.
KAPL01049-I	Would you like to execute the operation? Operation name = *aa...aa* [y/n]:	Details The `clear`/`set` operation will be started. To continue the operation, enter `y`. To cancel the operation, enter `n`. *aa...aa*: `clear` or `set` Action If you want to execute the operation, enter `y`. If you want to terminate processing, enter `n`. For details on the `clear` operation, see *clear (returns the path statistics to the initial value) on page 6-3*. For details on the `set` operation, see *set (sets up the*

Message ID	Message Text	Explanation
		operating environment) on page 6-15.
KAPL01050-I	The currently selected paths will be changed to the Online status. Is this OK? [y/n]:	Details The `online` operation will be started. To continue the `online` operation, enter `y`. To cancel the operation, enter `n`. Action If you want to execute online processing, enter `y`. If you want to terminate processing, enter `n`. For details on the `online` operation, see *online (places paths online) on page 6-10*.
KAPL01052-I	The currently selected paths will be changed to the Offline(C) status. Is this OK? [y/n]:	Details The `offline` operation will be started. To continue the `offline` operation, enter `y`. To cancel the operation, enter `n`. Action If you want to execute the offline processing, enter `y`. If you want to terminate processing, enter `n`. For details on the `offline` operation, see *offline (places paths offline) on page 6-7*.
KAPL01053-I	If you are sure that there would be no problem when the path is placed in the Offline(C) status, enter y. Otherwise, enter n. [y/n]:	Details The `offline` operation will be started. To continue the `offline` operation, enter `y`. To cancel the operation, enter `n`. Action If you want to execute offline processing, enter `y`. If you want to terminate processing, enter `n`. For details on the `offline` operation, see *offline (places paths offline) on page 6-7*.
KAPL01054-W	During the offline operation processing of the HDLM command, a path that cannot be placed in the Offline(C) status was detected. PathID = *aa...aa* Would you like to continue the processing of the offline operation? [y/n]:	Details A path that cannot be set to `Offline(C)` was detected during multi-path offline processing. To ignore this path and perform offline processing for the next path, enter `y`. To cancel offline processing, enter `n`. *aa...aa*: Path ID (decimal (base-10) number) Action

Message ID	Message Text	Explanation
		If you want to continue processing the `offline` operation of the HDLM command for other paths, enter `y`. If you want to terminate processing, enter `n`. For details on the `offline` operation, see *offline (places paths offline) on page 6-7*.
KAPL01055-I	All the paths which pass the specified *aa...aa* will be changed to the Offline(C) status. Is this OK? [y/n]:	Details Multiple paths will be collectively set to `Offline(C)` because the `-cha` parameter was specified. To collectively set multiple paths to `Offline(C)`, enter `y`. To cancel the operation, enter `n`. *aa...aa*: `CHA port` Action If you want to execute offline processing for the paths that meet the specified requirements, enter `y`. If you want to terminate processing, enter `n`.
KAPL01056-I	If you are sure that there would be no problem when all the paths which pass the specified *aa...aa* are placed in the Offline(C) status, enter y. Otherwise, enter n. [y/n]:	Details This message re-asks the user whether they want to set all the paths to `Offline(C)`. To set all the paths to `Offline(C)`, enter `y`. To cancel the operation, enter `n`. *aa...aa*: `CHA port` Action If you want to execute offline processing for the paths that meet the specified requirements, enter `y`. If you want to terminate processing, enter `n`.
KAPL01057-I	All the paths which pass the specified *aa...aa* will be changed to the Online status. Is this OK? [y/n]:	Details Multiple paths will be collectively placed `Online` because the `-cha` parameter has been specified. To continue processing, enter `y`. To cancel processing, enter `n`. *aa...aa*: `CHA port` Action If you want to execute online processing for the paths that meet the specified requirements, enter `y`. If you want to terminate processing, enter `n`.
KAPL01058-W	The specified parameter value is not needed. Operation name =	Details

Message ID	Message Text	Explanation
	aa...aa, parameter = *bb...bb*, parameter value = *cc...cc*	A parameter value was specified in a parameter that does not need a parameter value. *aa...aa*: Specified operation name *bb...bb*: Parameter name *cc...cc*: Parameter value Action Execute `help` *operation-name* of the HDLM command (`dlnkmgr`) to check the parameter and parameter value, and then retry. For details on the `help` operation, see *help (displays the operation format) on page 6-5*.
KAPL01059-W	Cannot specify the parameter *aa...aa* at the same time if you specify parameter *bb...bb* and parameter value *cc...cc*. Operation name = *dd...dd*	Details A parameter value is conflicting with the value of another parameter. *bb...bb*: Parameter name *cc...cc*: Parameter value *aa...aa*: Parameter name *dd...dd*: `view` or `set` Action Execute `help` *operation-name* of the HDLM command (`dlnkmgr`) to check the parameter and parameter value, and then retry. For details on the `help` operation, see *help (displays the operation format) on page 6-5*.
KAPL01060-I	The user terminated the operation. Operation name = *aa...aa*	Details Command processing will be aborted because `n` was entered for a required confirmation. *aa...aa*: `online`, `offline`, `set`, or `clear` Action None.
KAPL01061-I	*aa...aa* path(s) were successfully placed *bb...bb*; *cc...cc* path(s) were not. Operation name = *dd...dd*	Details This message indicates the number of the paths processed in an `online`/`offline` operation. *aa...aa*: Number of paths where the `online`/`offline` operation was successful (decimal (base-10) number) *bb...bb*: `Online`, `Online(S)`, `Online(D)` or `Offline(C)`

Message ID	Message Text	Explanation
		cc...cc: Number of paths where the `online`/`offline` operation was unsuccessful (decimal (base-10) number) *dd...dd*: `online` or `offline` Action None. For details on the `online` operation, see *online (places paths online) on page 6-10*. For details on the `offline` operation, see *offline (places paths offline) on page 6-7*.
KAPL01062-I	*aa...aa* path(s) were successfully placed Offline(C). The offline request of *bb...bb* path(s) were registered; *cc...cc* path(s) were not. Operation name = *dd...dd*	Details This message indicates the number of paths to be processed when an offline request was registered during reserve processing. *aa...aa*: The number of paths that were successfully taken offline (decimal (base-10) number) *bb...bb*: The number of paths for which offline processing was reserved (decimal (base-10) number) *cc...cc*: The number of paths that were not successfully taken offline (decimal (base-10) number) *dd...dd*: `offline` Action For batch processing of registering paths, execute the `view` operation to check the registered paths. For details on the `view` operation, see *view (displays information) on page 6-24*.
KAPL01063-I	The target path(s) are already *aa...aa*.	Details As a result of a previous `online`/`offline` operation, the specified path has already been set to `Online`/`Online(S)`/`Online(D)`/`Offline(C)`. *aa...aa*: `Online`, Online(S), Online(D) or `Offline(C)` Action Use the `view` operation of the HDLM command (`dlnkmgr`) to check the status of the path. For details on the `view` operation, see

Message ID	Message Text	Explanation
		view (displays information) on page 6-24. For details on the `online` operation, see *online (places paths online) on page 6-10*. For details on the `offline` operation, see *offline (places paths offline) on page 6-7*. For `Online(S)` or `Online(D)` paths: To change the status of a path from `Online(S)` or `Online(D)` to `Online`, re-execute the HDLM command using the -hapath parameter.
KAPL01068-I	Enter a license key:	Details The license key will now be renewed. Enter a license key. Action None.
KAPL01069-W	The entered license key is invalid.	Details The entered license key is invalid. Action Enter a valid license key.
KAPL01070-E	The entered license key is invalid. Renewal of the license key will now stop.	Details The license key renewal processing will be aborted because an invalid license key was entered three times in a row. Action Obtain a valid license key, and then retry.
KAPL01071-I	The permanent license was installed.	Details The license was renewed and is registered as a permanent license. Action None.
KAPL01072-I	The emergency license was installed. The license expires on *aa...aa*.	Details A license was renewed and is registered as an emergency license. *aa...aa*: Year (4 digits)/month (01-12)/day (01-31) Action Install a permanent license by the expiration day.
KAPL01073-E	The temporary license expired.	Details

Message ID	Message Text	Explanation
		The temporary license has expired. Register a permanent license. Action Register a permanent license.
KAPL01074-E	The emergency license expired.	Details The emergency license has expired. Register a permanent license. Action Register a permanent license.
KAPL01075-E	A fatal error occurred in HDLM. The system environment is invalid.	Details The license information file is missing. Action Re-install HDLM.
KAPL01076-I	The permanent license has been installed.	Details You do not need to install a license because a permanent license has already been installed. Action None.
KAPL01081-E	The license key file is invalid. File name = *aa...aa*	Details The format of the license key file is invalid. *aa...aa*: `Windows-`*`installation-destination-drive-name:`*`\hdlm_license` Action Store the license key file directly under the Windows installation-destination drive.
KAPL01082-E	There is no installable license key in the license key file. File name = *aa...aa*	Details There is no useable license key for HDLM in the license key file. *aa...aa*: `Windows-`*`installation-destination-drive-name`*`\hdlm_license` Action Make sure that the license key file is correct, and then re-execute.
KAPL01083-I	There is no license key file. File name = *aa...aa*	Details There is no license key file in the designated folder:

Message ID	Message Text	Explanation
		aa...aa: `Windows-`*`installation-destination-drive-name`*`\hdlm_license` Action When the message that prompts you to enter the license key is displayed, enter the license key. Alternatively, cancel the HDLM command, store the license key file directly under the Windows installation-destination drive, and then re-execute HDLM command.
KAPL01084-W	An attempt to delete the license key file has failed. File name = *aa...aa*	Details *aa...aa*: `Windows-`*installation-destination-drive-name*`\hdlm_license` Action If a license key file exists, delete it.
KAPL01088-W	The specified parameter values cannot be specified at the same time. Operation name = *aa...aa*, parameter = *bb...bb*, parameter values = *cc...cc*	Details *aa...aa*: `view` *bb...bb*: Parameter name *cc...cc*: Parameter values that cannot be specified at the same time Action Execute `help` *operation-name* of the HDLM command (`dlnkmgr`) to check which parameter can be specified, and then retry. For details on the `help` operation, see *help (displays the operation format) on page 6-5*.
KAPL01089-E	One of the following was executed at the same time as an HDLM command set -lic operation: another set -lic operation, or an update of the license for an update installation.	Action Check the license by using the HDLM command's `view -sys -lic` operation. If necessary, re-execute the HDLM command's `set -lic` operation. If the same error message is output again, contact your HDLM vendor or the maintenance company if there is a maintenance contract for HDLM. Do not perform the following operations: ∘ Simultaneously execute the HDLM command's `set -lic` operation with the `view -sys -lic` operation.

Message ID	Message Text	Explanation
		∘ Execute the HDLM command's `set -lic` operation while the license for an upgrade or re-installation is being updated.
KAPL01095-E	An attempt to acquire the HDLM version information has failed. details = *aa...aa*	Details *aa...aa*: Code showing the reason for the error Action Re-execute the command. If the same error occurs again, execute the `DLMgetras` utility for collecting HDLM error information, acquire the error information, and then contact your HDLM vendor or the company for which you have a service contract.
KAPL01096-E	An attempt to acquire the Service Pack version information has failed. details = *aa...aa*	Details *aa...aa*: Code showing the reason for the error Action Re-execute the command. If the same error occurs again, execute the `DLMgetras` utility for collecting HDLM error information, acquire the error information, and then contact your HDLM vendor or the company for which you have a service contract.
KAPL01100-I	*aa...aa*	Details This message indicates the executed command line. *aa...aa*: Executed command Action None.
KAPL01101-W	The target HBA port was not found. Operation name = *aa...aa*	Details The HBA having the HBA port WWN specified in the `-hbaportwwn` parameter could not be found. *aa...aa*: `offline` or `online` Action Use the `view` operation of the HDLM command (`dlnkmgr view -path -hbaportwwn`) to check the target HBA port WWN. After that, specify the appropriate HBA port WWN, and then retry.

Message ID	Message Text	Explanation
KAPL01102-I	All the paths which pass the specified *aa...aa* port will be changed to the Offline(C) status. Is this OK? [y/n]:	Details Multiple paths will be collectively placed `Offline(C)` because the `-hbaportwwn` parameter was specified. To collectively place multiple paths `Offline(C)`, enter `y`. To not collectively place them `Offline(C)`, enter `n`. *aa...aa*: HBA Action If you want to execute the offline processing for the paths which pass the specified target, enter `y`. If you want to terminate the processing, enter `n`.
KAPL01103-I	If you are sure that there would be no problem when all the paths which pass the specified *aa...aa* port are placed in the Offline(C) status, enter y. Otherwise, enter n. [y/n]:	Details This message re-asks the user whether to place all the paths `Offline(C)`. To place all the paths `Offline(C)`, enter `y`. To not place them `Offline(C)`, enter `n`. *aa...aa*: HBA Action If you want to execute the offline processing for the paths which pass the specified target, enter `y`. If you want to terminate the processing, enter `n`.
KAPL01104-I	All the paths which pass the specified *aa...aa* port will be changed to the Online status. Is this OK? [y/n]:	Details Multiple paths will be collectively placed `Online` because the `-hbaportwwn` parameter was specified. To collectively place multiple paths `Online`, enter `y`. To not collectively place them `Online`, enter `n`. *aa...aa*: HBA Action If you want to execute the online processing for the paths which pass the specified target, enter `y`. If you want to terminate the processing, enter `n`.
KAPL01107-I	The load balancing type specified for individual LUs will become invalid when this operation is executed. Do you want to execute the operation	Action If you want to change the load balancing algorithm for the system, enter `y`. If you want to terminate processing, enter `n`.

Message ID	Message Text	Explanation
	anyway? Operation name = set [y/n]:	
KAPL01117-W	An error occurred during processing to read the audit log configuration file.	Details An internal error occurred while reading the audit log configuration file. Action Contact your HDLM vendor or the maintenance company if there is a maintenance contract for HDLM.
KAPL01118-W	An error occurred during processing to output the audit log configuration file.	Details An internal parameter error when the audit-log data was output. Action Contact your HDLM vendor or the maintenance company if there is a maintenance contract for HDLM.
KAPL01119-W	An error occurred during processing to output the audit log configuration file.	Details An internal parameter error when the audit-log data was output. Action Contact your HDLM vendor or the maintenance company if there is a maintenance contract for HDLM.
KAPL01120-W	A storage system model ID could not be displayed. Details = *aa...aa*, *bb...bb*	Details A storage system model ID could not be displayed. *aa...aa*: Storage recognition information *bb...bb*: Error code Action Execute the `DLMgetras` utility for collecting HDLM error information, and then contact your HDLM vendor or the maintenance company if there is a maintenance contract for HDLM. For details on the `DLMgetras` utility, see *The DLMgetras utility for collecting HDLM error information on page 7-2*.
KAPL01133-I	*aa...aa* path(s) were successfully placed *bb...bb*; *cc...cc* path(s) were successfully placed *dd...dd*; *ee...ee* path(s) were not. Operation name = *ff...ff*	Details The number of paths processed by an online operation is shown. *aa...aa*: The number of paths which changed to the `Online` status *bb...bb*: `Online` or `Online(S)`

Message ID	Message Text	Explanation
		cc...cc: The number of paths which changed to the `Online(S)` or `Online(D)` status *dd...dd*: `Online(S)`, `Online(D)` or `Online(S)`/`Online(D)` *ee...ee*: The number of paths which failed to change to either the `Online`, `Online(S)` or `Online(D)` status *ff...ff*: `online` Action None.
KAPL01134-I	The target paths are already `Online` or `Online(S)`.	Details The specified paths are already in the `Online` or `Online(S)` status as a result of an online operation. Action Check path status by using the view operation. For details on the `view` operation, see *view (displays information) on page 6-24*. For Online(S) paths: To change the status of a path from `Online(S)` to `Online`, re-execute the HDLM command using the -hapath parameter.
KAPL01135-W	A host connection option is invalid. Option = *aa...aa*	Details *aa...aa*: Specified host connection option Action Execute the `help` operation of the HDLM command (`dlnkmgr`) to check the host connection options, and then retry. For details on the `help` operation, see *help (displays the operation format) on page 6-5*.
KAPL01136-W	The specified host connection options cannot be specified at the same time. Options = *aa...aa*	Details *aa...aa*: Host connection options that cannot be specified at the same time Action Execute the `help` operation of the HDLM command (`dlnkmgr`) to check the host connection options, and then retry. For details on the `help` operation, see

Message ID	Message Text	Explanation
		help (displays the operation format) on page 6-5.
KAPL01138-W	The *aa...aa* operation cannot be executed if the host connection option -l is specified.	Details *aa...aa*: Operation that cannot be executed Action Execute the `operation-name -help` operation of the HDLM command (`dlnkmgr`) to check the format of the operation, and then retry.
KAPL01139-W	The parameter *aa...aa* cannot be specified if the host connection option *bb...bb* is specified.	Details *aa...aa*: Parameter that cannot be specified *bb...bb*: Specified host connection option Action Execute the `operation-name -help` operation of the HDLM command (`dlnkmgr`) to check the format of the operation, and then retry.
KAPL01140-W	A duplicate host connection option is specified. Option = *aa...aa*	Details *aa...aa*: Duplicate option Action Delete the duplicate option, and then retry.
KAPL01141-W	There is no value specified for the host connection option. Option = *aa...aa*	Details *aa...aa*: Option name Action Specify the option value, and then retry.
KAPL01142-W	The parameter *aa...aa* cannot be specified if you omitted the host connection option.	Details *aa...aa*: Parameter that cannot be specified Action Execute the `operation-name -help` operation of the HDLM command (`dlnkmgr`) to check the format of the operation, and then retry.
KAPL01143-W	The host connection option value cannot be specified. Option = *aa...aa*	Details *aa...aa*: Option for which an option value cannot be specified Action

Message ID	Message Text	Explanation
		Execute the `help` operation of the HDLM command (`dlnkmgr`) to check the host connection options, and then retry. For details on the `help` operation, see *help (displays the operation format) on page 6-5*.
KAPL01144-W	The HDLM command was not executed from the VMware vSphere CLI command prompt.	Details The HDLM command was not executed from the VMware vSphere CLI command prompt. Action Execute the HDLM command from the VMware vSphere CLI command prompt.
KAPL01146-I	Because no path has been selected among the currently displayed paths, the paths in the Offline(C) and Offline(E) statuses will be changed to the Online status. Is this OK?[y/n]:	Details All the paths will be placed `Online` because the path selection parameter is not specified for the `online` operation. To place all the paths `Online`, enter `y`. To cancel the operation, enter `n`. Action If you want to execute online processing, enter `y`. If you want to terminate processing, enter `n`. Before you execute the processing, be sure to execute the `view` operation of the HDLM command (`dlnkmgr`) to check the path status. For details on the `view` operation, see *view (displays information) on page 6-24*. For details on the `online` operation, see *online (places paths online) on page 6-10*.
KAPL01147-I	*aa...aa* path(s) were successfully placed *bb...bb*; *cc...cc* path(s) were not. Number of target paths = *dd...dd*, operation name = *ee...ee*	Details This message indicates the number of the paths processed in an `online`/`offline` operation. *aa...aa*: Number of paths where the `online`/`offline` operation was successful(decimal (base-10) number) *bb...bb*: `Online` or `Offline(C)` *cc...cc*: Number of paths where the `online`/`offline` operation was unsuccessful(decimal (base-10) number)

Message ID	Message Text	Explanation
		dd...dd: Number of target paths for `online` or `offline` operation (decimal (base-10) number) *ee...ee*: `online` or `offline` Action None. For details on the `online` operation, see *online (places paths online) on page 6-10*. For details on the `offline` operation, see *offline (places paths offline) on page 6-7*.
KAPL01148-E	An attempt to connect to the specified server has failed. Operation name = *aa...aa*	Details An attempt to connect to the specified host has failed. *aa...aa*: Operation name Action ○ If vCLI was specified for dlmrmcenv --cli, check the server name, user name, and password that were specified for the HDLM command (`dlnkmgr`), and then retry. ○ If PowerCLI was specified for dlmrmcenv --cli, check the server name, user name, and password, and then retry. For details about this error, see the VMware PowerCLI messages that were output before this message.
KAPL01149-E	An attempt to connect to the HDLM driver (HTI_HDLM_SATP) has failed. Operation name = *aa...aa*	Details The HDLM command cannot manage HDLM on an ESXi server because the HDLM driver (`HTI_HDLM_SATP`) cannot be accessed. *aa...aa*: `clear`, `offline`, `online`, `set`, or `view` Action This message is output when there is no HDLM management-target path. If this message is output when an HDLM management-target path exists, execute the `DLMgetras` utility for collecting HDLM error information, and then contact your HDLM vendor or the maintenance company if there is a maintenance contract for HDLM. For details on the `DLMgetras` utility, see *The*

Message ID	Message Text	Explanation
		DLMgetras utility for collecting HDLM error information on page 7-2.
KAPL01150-E	The HDLM command cannot be executed because the VMware vSphere CLI is not installed.	Details The VMware vSphere CLI might have been removed after the utility for configuring HDLM remote management client environments (`dlmrmcenv`) was executed. In addition, if you are using VMware vSphere CLI 6.5/6.7, Perl might not be installed. Action If the VMware vSphere CLI was removed, install the VMware vSphere CLI again, and then re-execute the `dlmrmcenv` utility. For details on the `dlmrmcenv` utility, see The dlmrmcenv utility for configuring HDLM remote management client environments on page 7-21. If you are using VMware vSphere CLI 6.5/6.7 and Perl is not installed, install Perl.
KAPL01151-E	HDLM commands cannot be executed because HDLM for Windows is installed.	Details HDLM for VMware and HDLM for Windows cannot be used on the same host. Action Remove HDLM for VMware and install it on another host, or remove HDLM for Windows.
KAPL01152-E	The operation was canceled because the path configuration is being changed. Operation name = *aa...aa*	Details The operation was canceled because the path configuration was being changed during the operation. *aa...aa*: `offline`, `online`, or `view` Action Check that the path configuration is not being changed, and then re-execute the operation.
KAPL01153-W	During the offline operation processing of the HDLM command, a path that cannot be placed in the Offline(C) status was detected. PathID = *aa...aa*	Details A path that cannot be set to the `Offline(C)` status was detected

Message ID	Message Text	Explanation
		during multi-path offline processing. *aa...aa*: Path ID (decimal (base-10) number) Action Execute the `view` operation the HDLM command (`dlnkmgr`) to check the path status. For details on the `view` operation, see *view (displays information) on page 6-24*.
KAPL01154-W	The dynamic I/O path control function is already set to *aa...aa* for the system.	Details *aa...aa*: `on` or `off` Action Use the `view` operation of the HDLM command (`dlnkmgr`) to check the setting for the host, storage, and LUs. For details on the `view` operation, see *view (displays information) on page 6-24*.
KAPL01155-W	The dynamic I/O path control function is already set to *aa...aa* for storage.	Details *aa...aa*: `on` or `off` Action Use the `view` operation of the HDLM command (`dlnkmgr`) to check the setting for storage. For details on the `view` operation, see *view (displays information) on page 6-24*.
KAPL01158-E	Dynamic I/O path control cannot be applied to the specified storage.	Action Use the `view` operation of the HDLM command (`dlnkmgr`) to check the path ID. For details on the `view` operation, see *view (displays information) on page 6-24*.
KAPL01167-I	All paths will be set to `Online` or `Online(D)`. Is this OK? [y/n]:	Details All paths will be set to `Online` or `Online(D)` because no path is specified. To continue, enter `y`. To cancel the operation, enter `n`. Action To set all paths to `Online` or `Online(D)`, enter `y`. To cancel the operation, enter `n`. Before you execute the processing, you must check the path status by

Message ID	Message Text	Explanation
		executing the view operation of the HDLM command dlnkmgr.
KAPL01168-I	All P-VOL paths that are connected to the LU that has the specified path ID will be set to `Online(D)`. Is this OK? [y/n]:	Details All paths for each specified LU will be set to `Online` or `Online(D)`. To continue, enter `y`. To cancel the operation, enter `n`. Note: All paths of the LU, including non-P-VOL paths, will be set to `Online` or `Online(D)`. Action To set to `Online` or `Online(D)` all paths that are connected to the LU that has the specified path ID, enter `y`. To cancel the process, enter `n`.
KAPL01169-I	All `Online(S)` or `Online(D)` paths will be set to `Online`. Is this OK? [y/n]:	Details All paths in the `Online(S)` or `Online(D)` status will be set to Online because no path is specified. To continue, enter `y`. To cancel the operation, enter `n`. Action To execute online processing, enter `y`. To cancel the operation, enter `n`. Before you execute the processing, you must check the path status by executing the view operation of the HDLM command dlnkmgr.
KAPL01170-I	All `Online(S)` or `Online(D)` paths that are connected to the LU that has the specified path ID will be set to `Online`. Is this OK? [y/n]:	Details All paths in the `Online(S)` or `Online(D)` status for each specified LU will be set to `Online`. To continue, enter `y`. To cancel the operation, enter `n`. Action To set to online the all `Online(S)` or `Online(D)` paths that are connected to the specified LU with path ID, enter `y`. To cancel the operation, enter `n`.
KAPL01171-I	The target paths are already *aa...aa* or *bb...bb*.	Details The specified paths are already in the `Online`, `Online(S)`, or `Online(D)` status as a result of an online operation. *aa...aa*: `Online` or `Online(S)`

Message ID	Message Text	Explanation
		bb...bb: `Online(D)` or `Online(S)`/`Online(D)` Action Check path status by using the view operation. For `Online(S)` or `Online(D)` paths: To change the status of a path from `Online(S)` or `Online(D)` to `Online`, re-execute the HDLM command with the -hapath parameter specified.
KAPL01172-I	There are no `Online(S)`/`Online(D)` paths among the target paths.	Details An online operation was executed using the -hapath parameter, but there are no paths with the `Online(S)`/`Online(D)` status among the specified paths. Action Use the view operation of the HDLM command (dlnkmgr) to check the status of the path.
KAPL01173-W	The target CHA port was constructed from multiple physical CHA ports. Operation name = *aa...aa*. Specify a physical CHA port by using the "-cha -pathid" parameter.	Details In an environment where storage systems are virtualized, when you specify a CHA port by using the `-chaid` parameter of the offline or online operation, the CHA port might be constructed from multiple CHA ports of the physical storage system. In such a case, you cannot execute the offline or online operation with the `-chaid` parameter specified. *aa...aa*: `offline` or `Online` Action Specify a physical CHA port by using the `-cha -pathid` parameter, and then re-execute the `offline` or `online` operation.
KAPL01174-W	If the Physical Storage View is disabled, the parameter value *aa...aa* cannot be specified for the -item parameter.	Details If the Physical Storage View is disabled, the parameter value shown cannot be specified. *aa...aa*: `virt` Action When specifying virtual storage information as a display item, enable the Physical Storage View.
KAPL01175-W	If the Physical Storage View is enabled, the parameter value	Details

Message ID	Message Text	Explanation
	aa...aa cannot be specified for the -item parameter.	If the Physical Storage View is enabled, the parameter value shown cannot be specified. *aa...aa*: `phys`, `vid`, `ha`, or `hastat` Action When specifying physical storage information as a display item, disable the Physical Storage View.
KAPL01176-I	Some of the target paths are in the offline status. Storage system settings are not refreshed for offline paths.	Details HDLM cannot refresh storage system settings for offline paths, because HDLM cannot acquire the settings. Action Place online the paths for which HDLM will refresh storage system settings, and execute the refresh operation.
KAPL01177-W	HDLM failed to acquire storage system settings for some paths.	Details HDLM failed to acquire storage system settings for some paths. Action If this message is output when path errors occur during a refresh operation, recover from the path errors, place the paths online, and then re-execute the refresh operation. If this message is output when there are no offline paths, execute the DLMgetras utility to collect error information, and then contact your vendor or maintenance company.
KAPL01178-E	HDLM failed to refresh the storage system settings. Details = *aa...aa*, *bb...bb*	Details *aa...aa*: Detailed information 1 *bb...bb*: Detailed information 2 Action Execute the DLMgetras utility to collect error information, and then contact your vendor or maintenance company.
KAPL01180-E	After HDLM was installed, the ESXi host was not restarted.	Details After HDLM was installed, the ESXi host was not restarted. Action Restart the ESXi host.
KAPL01181-E	The HDLM driver is not installed correctly.	Details

Message ID	Message Text	Explanation
		The SATP or the PSP of the HDLM driver is not installed. Action Reinstall HDLM on the ESXi host.
KAPL01182-E	The HDLM command cannot be executed because VMware PowerCLI is not installed.	Details The VMware PowerCLI cmdlet is not installed in the path specified for the PSModulePath environment variable. Action Install VMware PowerCLI in the path specified for the PSModulePath environment variable.
KAPL01183-E	The HDLM command cannot be executed because the VMware PowerCLI settings are not configured properly.	Details The HDLM command cannot be executed because the execution policy of Windows PowerShell is configured improperly or because the InvalidCertificateAction setting of VMware PowerCLI is configured improperly. Action ○ In the Windows PowerShell prompt, execute Get-ExecutionPolicy. The execution policy of Windows PowerShell is displayed. If the following policy is not displayed, you will need to specify it. • RemoteSigned In the Windows PowerShell prompt, execute the following command to specify the execution policy. `Set-ExecutionPolicy RemoteSigned -Scope CurrentUser` ○ In the Windows PowerShell prompt, execute `Get-PowerCLIConfiguration -Scope user`. The value of the InvalidCertificateAction setting of VMware PowerCLI is displayed. If the following value is not displayed, you will need to specify it. • Ignore

Message ID	Message Text	Explanation
		In the Windows PowerShell prompt, execute the following command to specify the certification check setting. `Set-PowerCLIConfiguration -Scope user -InvalidCertificateAction Ignore`

KAPL03001 to KAPL04000

Message ID	Message Text	Explanation
KAPL03001-I	HDLM API information - *aa...aa*	Details This information is required for resolving problems. *aa...aa*: Trace information Action None.
KAPL03002-W	HDLM API Warning - *aa...aa*	Details This information is required for resolving problems. *aa...aa*: API trace information Action Refer to the contents of the warning.
KAPL03003-E	HDLM API Error information - *aa...aa*	Details This information is required for resolving problems. *aa...aa*: API trace error information Action Execute the `DLMgetras` utility for collecting HDLM error information, and then contact your HDLM vendor or the maintenance company if there is a maintenance contract for HDLM. For details on the `DLMgetras` utility, see *The DLMgetras utility for collecting HDLM error information on page 7-2*.
KAPL03009-E	An attempt to connect to the server has failed. Server = *aa...aa*	Details A connection cannot be established to the ESXi host that is managed by using Global Link Manager.

Message ID	Message Text	Explanation
		aa...aa: IP address of the host Action Check the following: ○ Make sure the host is running. ○ Make sure the user account specified by the utility for configuring HDLM remote management client environments (`dlmrmcenv`) has been created on the host. For details on the `dlmrmcenv` utility, see *The dlmrmcenv utility for configuring HDLM remote management client environments on page 7-21*.
KAPL03999-E	An unexpected error occurred.	Details Conflicting versions of HDLM modules are being used. Action Execute the `DLMgetras` utility for collecting HDLM error information, and then contact your HDLM vendor or the maintenance company if there is a maintenance contract for HDLM. For details on the `DLMgetras` utility, see *The DLMgetras utility for collecting HDLM error information on page 7-2*.

KAPL04001 to KAPL05000

Message ID	Message Text	Explanation
KAPL04001-I	HDLM manager started.	Action None.
KAPL04002-E	Could not start the HDLM manager.	Details The HDLM manager failed to start because the current environment is unsuitable for the HDLM manager to run in. Action Execute the `DLMgetras` utility for collecting HDLM error information, and then contact your HDLM vendor or the maintenance company if there is a maintenance contract for HDLM. For details on

Message ID	Message Text	Explanation
		the `DLMgetras` utility, see *The DLMgetras utility for collecting HDLM error information on page 7-2*.
KAPL04003-E	The startup parameter is invalid.	Details The HDLM manager internal parameter is invalid. Action Execute the `DLMgetras` utility for collecting HDLM error information, and then contact your HDLM vendor or the maintenance company if there is a maintenance contract for HDLM. For details on the `DLMgetras` utility, see *The DLMgetras utility for collecting HDLM error information on page 7-2*.
KAPL04004-I	HDLM manager will now terminate.	Action None.
KAPL04005-E	Cannot connect the service control manager.	Details HDLM manager could not start normally because it was unable to connect the service control manager. Action The HDLM manager starts as a service and as such, to start HDLM from the command line, use the `net start DLMManagerVM` command.
KAPL04006-E	Cannot register the service control handler function. Return value = *aa...aa*	Details HDLM manager could not start normally because it was unable to register the service control handler function. *aa...aa*: OS error code Action Contact your HDLM vendor or the maintenance company if there is a maintenance contract for HDLM.
KAPL04007-E	Cannot register the service status. Return value = *aa...aa*	Details HDLM manager could not start normally because it was unable to register the service status. *aa...aa*: OS error code Action

Message ID	Message Text	Explanation
		Contact your HDLM vendor or the maintenance company if there is a maintenance contract for HDLM.
KAPL04008-E	Cannot open the option definition file (*aa...aa*).	Details HDLM manager could not start normally because it was unable to open the option definition file. *aa...aa*: Option definition file name Action Check whether another program is currently using this file (for example, the file is being opened in a text editor), or whether the file has been inadvertently deleted.
KAPL04009-E	The option definition is invalid.	Details HDLM manager could not start normally because some of the definitions in the option definition file were invalid. Action If the KAPL04033-W message is output after this message, execute the `dlnkmgr view -sys -sfunc` command, and then check the option settings. Use the `dlnkmgr set` operation to return options settings back to where you had them. If the KAPL04033-W message is not output, restart HDLM manager. If the same error occurs, re-install HDLM. For details on the `view` operation, see *view (displays information) on page 6-24*. For details on the `set` operation, see *set (sets up the operating environment) on page 6-15*.
KAPL04010-E	Could not open the error log file.	Details HDLM manager could not start normally because it was unable to open the error log file. Action Check whether another program is currently using the error log file (for example, the file is being opened in a text editor), or

Message ID	Message Text	Explanation
		whether the error log file has been inadvertently deleted.
KAPL04011-E	Could not output the error log file.	Details The log information could not be output to the error log file. Action Make sure that the disk has enough unused capacity.
KAPL04012-E	Could not create a communication pipe. RC = *aa...aa*	Details HDLM manager could not start normally because it was unable to create a pipe file, which is used in communication with HDLM commands. *aa...aa*: OS error code (decimal number) Action Execute the `DLMgetras` utility for collecting HDLM error information, and then contact your HDLM vendor or the maintenance company if there is a maintenance contract for HDLM. For details on the `DLMgetras` utility, see *The DLMgetras utility for collecting HDLM error information on page 7-2*.
KAPL04013-E	Input is impossible via the communication pipe. RC = *aa...aa*	Details Data could not be read from the pipe file while communicating with an HDLM command. *aa...aa*: OS error code (decimal number) Action Execute the `DLMgetras` utility for collecting HDLM error information, and then contact your HDLM vendor or the maintenance company if there is a maintenance contract for HDLM. For details on the `DLMgetras` utility, see *The DLMgetras utility for collecting HDLM error information on page 7-2*.
KAPL04014-E	Output is impossible via the communication pipe. RC = *aa...aa*	Details Data could not be written to the pipe file while communicating with an HDLM command. *aa...aa*: OS error code (decimal number)

Message ID	Message Text	Explanation
		Action Execute the `DLMgetras` utility for collecting HDLM error information, and then contact your HDLM vendor or the maintenance company if there is a maintenance contract for HDLM. For details on the `DLMgetras` utility, see *The DLMgetras utility for collecting HDLM error information on page 7-2*.
KAPL04021-I	HDLM manager information - *aa...aa*	Details This information is required for resolving problems. *aa...aa*: HDLM manager trace information Action None.
KAPL04022-W	HDLM manager warning information - *aa...aa*	Details This information is required for resolving problems. *aa...aa*: HDLM manager trace warning information Action Execute the `DLMgetras` utility for collecting HDLM error information, and then contact your HDLM vendor or the maintenance company if there is a maintenance contract for HDLM. For details on the `DLMgetras` utility, see *The DLMgetras utility for collecting HDLM error information on page 7-2*.
KAPL04023-E	HDLM manager error information - *aa...aa*	Details This information is required for resolving problems. *aa...aa*: HDLM manager trace error information Action Execute the `DLMgetras` utility for collecting HDLM error information, and then contact your HDLM vendor or the maintenance company if there is a maintenance contract for HDLM. For details on the `DLMgetras` utility, see *The DLMgetras utility for collecting HDLM error information on page 7-2*.

Message ID	Message Text	Explanation
KAPL04024-C	A critical error occurred in the HDLM manager. (*aa...aa*)	Details This information is required for resolving problems. *aa...aa*: HDLM manager trace error information Action Execute the `DLMgetras` utility for collecting HDLM error information, and then contact your HDLM vendor or the maintenance company if there is a maintenance contract for HDLM. For details on the `DLMgetras` utility, see *The DLMgetras utility for collecting HDLM error information on page 7-2*.
KAPL04025-C	A memory shortage occurred in the HDLM manager.	Details There was not enough memory to run the HDLM manager processes. Action To increase the amount of free memory, terminate unnecessary applications or restart the host.
KAPL04033-W	The option definition file was re-created.	Details When an existing option definition file cannot be read, a new option definition file will be re-created by using the default values. If some of the options can be read, those values can be used. As for any remaining values, the default values will be used. Action For any non-default options, use the `dlnkmgr set` operation to set the options again. For details on the `set` operation, see *set (sets up the operating environment) on page 6-15*.
KAPL04034-E	An attempt to create the option definition file has failed.	Details An attempt to re-create an option definition file using the default values has failed. Action Remove unnecessary files to secure unused capacity on the file system, or check the write permissions for the folder and file.

Message ID	Message Text	Explanation
KAPL04042-I	HDLM SNMP TRAP information - *aa...aa*	Details All the paths that path health checking examined are fine. *aa...aa*: Start or stop. Action None.
KAPL04045-I	HDLM SNMP TRAP was sent. Trap ID = *aa...aa*, IP Address = *bb...bb*, Port Number= *cc...cc*, Community = *dd...dd*, Trap Data = *ee..ee*	Details *aa...aa*: Trap ID *bb...bb*: Destination IP address of the trap *cc...cc*: Destination port number of the trap *dd...dd*: Community name given to the trap *ee...ee*: Transmission data Action None.
KAPL04053-W	The option definition file was recovered from a work file.	Details Execute the `dlnkmgr view -sys` command to check whether the settings are recovered. If the settings are not recovered, execute the `dlnkmgr set` operation to recover the settings.
KAPL04057-E	An attempt to connect to the VMware server failed. (VMware server host = *aa...aa*)	Details *aa...aa*: VMware server host IP address Action If the VMware server is not stopped, check whether a network failure occurred.
KAPL04058-I	The connection to the VMware server was restored. (VMware server host = *aa...aa*)	Details *aa...aa*: VMware server host IP address Action None.
KAPL04059-I	Monitoring of the VMware server started. (VMware server host = *aa...aa*)	Details *aa...aa*: VMware server host IP address Action None.
KAPL04060-I	Monitoring of the VMware server will now end. (VMware server host = *aa...aa*)	Details *aa...aa*: VMware server host IP address

Message ID	Message Text	Explanation
		Action None.
KAPL04061-E	The VMware server is not registered in the Credential Store. (VMware server host = *aa...aa*)	Details If you want to manage the VMware server by using Global Link Manager, the host must be registered in the credential store. If the host is not registered in the Credential Store, monitoring of the VMware server will be disabled. *aa...aa*: VMware server host IP address Action If you want to manage the VMware server by using Global Link Manager, register the host to the Credential Store, and then refresh the host information in Global Link Manager to enable monitoring of the VMware server. If the VMware server has already been removed from Global Link Manager, no action is needed.

KAPL08001 to KAPL09000

Message ID	Message Text	Explanation
KAPL08022-E	A path error occurred. ErrorCode = *aa...aa*, PathID = *bb...bb*, PathName = *cc...cc.dd...dd.ee...ee.ff...ff*, DNum = *gg...gg*, HDevName = *hh...hh*	Details A physical or logical error occurred in the path. *aa...aa*: Error code (hexadecimal number) *bb...bb*: Path ID (same as PathID of `view -path`) (decimal number) *cc...cc*: Host port number (same as PathName of `view -path`) (hexadecimal number) *dd...dd*: Bus number (same as PathName of `view -path`) (hexadecimal number) *ee...ee*: Target ID (same as PathName of `view -path`) (hexadecimal number) *ff...ff*: HLU number (same as PathName of `view -path`) (hexadecimal number)

Message ID	Message Text	Explanation
		gg...gg: Dev number (same as DNum of `view -path`) (decimal number) *hh...hh*: Host device name (same as HDevName of `view -path`) Action The path might be damaged. For details on what to do, see *What to do for a path error on page 5-2*, and then switch the path shown in the message to `Online`.
KAPL08026-E	An error occurred on all the paths of the LU. PathID = *aa...aa*	Details An error occurred in the last, remaining path of an LU. (This is most likely as a result of a disconnection.) *aa...aa*: Path ID (same as PathID of `view -path`) (decimal number) Action Errors are detected in all the paths connected to the LUs. See *What to do for a path error on page 5-2* to make the path shown in the error message or the paths connected to the target LU.
KAPL08027-E	A path was excluded from the items subject to automatic failback. PathID = *aa...aa*	Details A path was excluded from being subject to automatic failbacks because the system judged that an intermittent error was occurring in that path. *aa...aa*: Path ID (same as PathID of `view -path`) (decimal number) Action An intermittent error has occurred. Check the path for any possible problems. For details on what to do, see *What to do for a path error on page 5-2*, and switch the path shown in the message to `Online`.
KAPL08032-I	A path was recovered. (PathID = *aa...aa*)	Details The path has changed to an online status. *aa...aa*: Path ID (same as PathID of `view -path`) (decimal number) Action None

KAPL09001 to KAPL10000

Message ID	Message Text	Explanation
KAPL09001-E	There is no system management permission. Login with administrator permission and *aa...aa* HDLM.	Details The current user does not have the necessary administrator permission to install or remove HDLM. *aa...aa*: `re-install` or `re-remove` Action Re-install or re-remove HDLM as a user who is a member of the Administrators group.
KAPL09034-E	An Internal error occurred in the HDLM Installer. Code = *aa...aa bb...bb* Contact your HDLM vendor or the maintenance company if there is a maintenance contract of HDLM.	Details During installation of HDLM, an error occurred that was probably not a result of a user operation. *aa...aa*: Error number (decimal number) *bb...bb*: Detailed information (decimal number) Action Contact your HDLM vendor or the maintenance company if there is a maintenance contact of HDLM.
KAPL09173-W	HDLM version *aa...aa* is installed. Do you want to overwrite it with version *bb...bb*?	Details *aa...aa*: Installed version number of HDLM (character string) *bb...bb*: Version number of HDLM to be installed (character string) Action Click the **OK** button to upgrade or re-install HDLM.
KAPL09181-I	The *aa...aa* of HDLM version *bb...bb* completed successfully.	Details The installation or remove of HDLM has completed normally. *aa...aa*: `installation` or `remove` *bb...bb*: Version number of the installed or removed HDLM Action None.
KAPL09182-W	An attempt to *aa...aa* HDLM version *bb...bb* has failed. See the previous messages to resolve the problems.	Details The unattended installation or remove of HDLM failed. *aa...aa*: `install` or `remove` *bb...bb*: Version number of HDLM you attempted to install or remove

Message ID	Message Text	Explanation
		Action See the previous warning and error messages to resolve the problems.
KAPL09187-W	No parameter is specified.	Details No installation-information settings file has been specified in the `installhdlm` utility for installing HDLM. Action Make sure that an actual installation-information settings file for the `installhdlm` utility is appropriate, and then try again.
KAPL09188-W	Too many parameters are specified.	Details Multiple parameters were specified for the `installhdlm` utility for installing HDLM. Action Make sure that the parameters for the `installhdlm` utility is appropriate, and then try again. For details on the `installhdlm` utility, see *The installhdlm utility for installing HDLM on page 7-23*.
KAPL09189-W	The parameter contains an incorrect value. (Value = *aa...aa*)	Details Either `-f`, `-v`, or `-h` must be specified as the first parameter for the `installhdlm` utility for installing HDLM. `-s`, or `-h` must be specified as parameters for the `removehdlm` utility for removing HDLM. *aa...aa*: Invalid parameter (character string) Action Make sure that the parameters for the `installhdlm` or `removehdlm` utility are appropriate, and then try again. For details on the `installhdlm` utility, see *The installhdlm utility for installing HDLM on page 7-23*. For details on the `removehdlm` utility, see *The removehdlm utility for removing HDLM on page 7-26*.
KAPL09190-W	The installation information settings file is not specified.	Details

Message ID	Message Text	Explanation
		The installation-information settings file is not specified for the second parameter in the `installhdlm` utility for installing HDLM. Action Make sure that the parameters in the `installhdlm` utility are appropriate, and then try again.
KAPL09191-W	The installation information settings file does not exist.	Details The installation-information settings file specified for the second parameter in the `installhdlm` utility for installing HDLM does not exist. Action Make sure that the path name of the installation-information settings file is appropriate, and then try again.
KAPL09192-W	An installation information settings file of an unsupported product version is specified. (hdlmversion = *aa...aa*)	Details The specified installation-information settings file is not supported by this version of HDLM. *aa...aa*: The HDLM version in which the specified installation-information settings file was provided Action Correct the version number set for hdlmversion in the installation-information settings file so that it matches the version of HDLM to be installed, and then try again.
KAPL09193-W	A definition in the installation information settings file is invalid. (*aa...aa* = *bb...bb*)	Details An invalid value has been specified for a key. *aa...aa*: The key where the invalid value was specified *bb...bb*: The invalid key value Action Correct the definition in the installation-information settings file, and then try again.
KAPL09194-W	A folder or file specified in the installation information settings file does not exist. (*aa...aa* = *bb...bb*)	Details The folder or file specified for a key does not exist.

Message ID	Message Text	Explanation
		aa...aa: The key name of the entry where the path name of a file or folder is specified *bb...bb*: The path name of the file or folder that does not exist Action Correct the definition in the installation-information settings file, and then try again.
KAPL09195-W	The setup.exe file does not exist.	Details HDLM cannot be installed, because the installation program (`setup.exe`) does not exist in the folder that is specified in the installfile_location key. Action Correct the path set for installation_location in the installation-information settings file, and then try again.
KAPL09216-E	An error occurred during I/O of a file that installhdlm uses. Error Code = *aa...aa*, *bb...bb*	Details An error occurred during I/O of a file that `installhdlm` uses. *aa...aa*: Error number that indicates the executed processing (decimal (base-10) number) *bb...bb*: Return value of the executed processing (decimal (base-10) number) Action Make sure that there is enough free space for the folder specified in the workdir key. If there is not, allocate the required amount of space, and then retry the operation. For details about how to determine the amount of space that is required, see *Unattended installation on remote management client on page 3-15*.
KAPL09284-W	HDLM is not installed.	Details If HDLM is not installed, the `installhdlm` utility for installing HDLM cannot be executed with the `-v` parameter. Action None.
KAPL09605-I	There is no license key file. File name = *aa...aa*	Details

Message ID	Message Text	Explanation
		There is no license key file in the designated folder. *aa...aa*: `Windows-`*`installation-destination-drive-name`*`\hdlm_license` or *`the-file-that-the-user-specified`* Action Enter a license key when prompted by a message to do so. Alternatively, cancel the installation, save the correct license key file in the designated folder, and then re-execute the installation.
KAPL09606-E	The entered license key is invalid. The HDLM installation will now terminate. Obtain a valid license key, and then re-install HDLM.	Details The renewal of the license key will be aborted because an invalid license key was entered. Action Obtain a valid license key, and then re-install HDLM.
KAPL09607-E	Cannot install in this system. Install HDLM on a supported OS.	Details HDLM cannot be installed on this system. Action Install HDLM on a supported OS. For information on which OSs are supported, see *Hosts and OSs supported by HDLM on page 3-2*.
KAPL09608-W	The HDLM for Windows has already been installed in this system.	Details HDLM for Windows and HDLM for VMware cannot be installed on the same host. Action None.
KAPL09609-E	There is no system management permission. Login with administrator permission and re-install HDLM.	Details The current user does not have the administrator permission to install or remove HDLM. Action Login with administrator permission and re-install or re-remove HDLM.
KAPL09610-W	The entered license key is invalid.	Details Re-enter the license key because an entered license key is invalid. Action

Message ID	Message Text	Explanation
		Enter a valid license key.
KAPL09611-E	The entered license key is invalid. The HDLM installation will now terminate. Obtain a valid license key, and then re-install HDLM.	Details The entered license key is invalid. Installation is aborted. Action Retry installation.
KAPL09612-W	There is no installable license key in the license key file. File name = *aa...aa*	Details There is no HDLM-installable license key in the license key file. *aa...aa*: `Windows-installation-destination-drive-name\hdlm_license` or *the-file-that-the-user-specified* Action Make sure that the license key file is correct, and then re-execute.
KAPL09613-E	License information cannot be acquired.	Details License information cannot be acquired from the already installed HDLM environment. Action Remove HDLM, and then restart the installation program.
KAPL09614-W	An attempt to *aa...aa* Hitachi Command Suite Common Agent has failed.	Details *aa...aa*: install or remove Action Wait a while, and then reperform the installation or remove. If the problem is not solved, then contact your HDLM vendor or the maintenance company if there is a maintenance contract for HDLM.
KAPL09615-W	An attempt to *aa...aa* HDLM version *bb...bb* has failed.	Details The unattended installation or remove of HDLM failed. *aa...aa*: `install` or `remove` *bb...bb* : Version number of HDLM you attempted to install or remove Action ○ install: Confirm the following, and then execute the `installhdlm` utility for installing HDLM again: • Confirm that the file and folder specified for the

Message ID	Message Text	Explanation

		following keys in the installation-information settings file are correct:
		`licensekeyfile`
		`installdir`
		• Confirm that valid license information is stored in the license key file specified for `licensekeyfile` key.
		If the problem persists, use `setup.exe` to install HDLM. If an error occurs, take action according to the relevant error message.
		∘ remove:
		Contact your HDLM vendor or the maintenance company if there is a maintenance contract for HDLM.

KAPL09616-E	An attempt to install *aa...aa* failed. (return code = *bb...bb*)	Details An attempt to install Microsoft Visual C++ Redistributable Package failed. *aa...aa*: Microsoft Visual C++ 2015-2019 Redistributable Package (x86)14.24.28127 *bb...bb*: Error code of the Windows installer Action Refer to the error code of the Windows installer and to the installation log file (vcredist_x86_log) that is output directly under the system drive, and resolve the error. Then, re-install HDLM.
KAPL09617-I	Installation information = *aa...aa*	Details This message displays detailed information on installation. *aa...aa*: Detailed information on the installation Action None.

KAPL10001 to KAPL11000

Message ID	Message Text	Explanation
KAPL10001-W	No parameter has been specified.	Details No folder to which the collected information will be output has been specified. Action Check the parameters of the `DLMgetras` utility for collecting HDLM error information, and then retry. For details on the `DLMgetras` utility, see *The DLMgetras utility for collecting HDLM error information on page 7-2*.
KAPL10002-W	Too many parameters have been specified.	Details Four or more parameters have been specified. Action Check the parameters of the `DLMgetras` utility for collecting HDLM error information, and then retry. For details on the `DLMgetras` utility, see *The DLMgetras utility for collecting HDLM error information on page 7-2*.
KAPL10004-W	The parameter contains an incorrect value. Value = *aa...aa*	Details The first parameter must be a folder. *aa...aa*: Invalid parameter Action Check the parameters of the `DLMgetras` utility for collecting HDLM error information, and then retry. For details on the `DLMgetras` utility, see *The DLMgetras utility for collecting HDLM error information on page 7-2*.
KAPL10009-W	The specified directory already exists. Do you want to overwrite it? [y/n]:	Details The specified folder already exists. Enter `y` to overwrite it, or `n` to cancel. Action The specified folder already exists. Enter `y` to overwrite the existing file. Enter `n` or press any other key to terminate the `DLMgetras` utility for collecting HDLM error

Message ID	Message Text	Explanation
		information, without executing it. For details on the `DLMgetras` utility, see *The DLMgetras utility for collecting HDLM error information on page 7-2*.
KAPL10017-W	You lack privileges for executing the utility for collecting HDLM error information.	Details The `DLMgetras` utility for collecting HDLM error information must be executed by a user who is a member of the Administrators group. Action Re-execute the utility as a user who is a member of the Administrators group. For details on the `DLMgetras` utility, see *The DLMgetras utility for collecting HDLM error information on page 7-2*.
KAPL10020-I	The file has been obtained successfully. File = *aa...aa*, Collection time = *bb...bb*(GMT:*bb...bb*)	Details The file to be collected has been obtained. *aa...aa*: Collected file name *bb...bb*: Year/month/day hour:minute:second Action None.
KAPL10022-I	The utility for collecting HDLM error information completed normally.	Details Error information has been collected. Action None. For details on the `DLMgetras` utility, see *The DLMgetras utility for collecting HDLM error information on page 7-2*.
KAPL10030-I	A user terminated the utility for collecting HDLM error information.	Details Processing of the `DLMgetras` utility for collecting HDLM error information has been terminated because the user replied to the confirmation with an `n` response. Action None. For details on the `DLMgetras` utility, see *The DLMgetras utility for collecting HDLM error information on page 7-2*.

Message ID	Message Text	Explanation
KAPL10031-W	The entered value is invalid. Continue operation ? [y/n]:	Details A value other than `y` or `n` has been entered for a [y/n] request. Enter `y` or `n`. Action Enter `y` or `n`.
KAPL10032-W	The entered value is invalid. The utility for collecting HDLM error information stops.	Details Processing of the `DLMgetras` utility for collecting HDLM error information will terminate because an invalid response was sent three times in a row to a request. Action Re-execute the `DLMgetras` utility. For details on the `DLMgetras` utility, see *The DLMgetras utility for collecting HDLM error information on page 7-2*.
KAPL10033-W	The file does not exist. Filename = *aa...aa*	Details No file to collect information exists. *aa...aa*: Information collection file Action None.
KAPL10034-E	The file could not be copied. Filename = *aa...aa*, Details = *bb...bb*	Details Execution of the `cp` command failed. *aa...aa*: File name you tried to copy *bb...bb*: Error number of the Windows API (hexadecimal number) Action An error occurred while the information collection file was being copied. The error might be a result of an unstable user environment. Check the system configuration.
KAPL10041-I	Collection of *aa...aa* information will now start.	Details *aa...aa*: Log information to be collected Action None.
KAPL10042-I	Collection of *aa...aa* information will now finish.	Details *aa...aa*: Collected log information

Message ID	Message Text	Explanation
		Action None.
KAPL10043-I	Error information is being collected. (*aa...aa*%)	Details *aa...aa*: What percentage of all the information to be collected is log information Action None.
KAPL10044-W	There is insufficient disk space.	Details The `DLMgetras` utility for collecting HDLM error information execution will now stop because the available disk capacity has decreased to less than 50 MB. Action Re-execute in an environment that has at least 50 MB of free disk capacity.
KAPL10045-W	A parameter is invalid.	Details The specified parameter is invalid. Action Make sure that the parameters for the `DLMgetras` utility for collecting HDLM error information are appropriate, and then try again. For details on the `DLMgetras` utility, see *The DLMgetras utility for collecting HDLM error information on page 7-2*.
KAPL10046-W	A parameter value is invalid.	Details The specified parameter is invalid. Action Make sure that the parameters for the `DLMgetras` utility for collecting HDLM error information are appropriate, and then try again. For details on the `DLMgetras` utility, see *The DLMgetras utility for collecting HDLM error information on page 7-2*.
KAPL10047-W	A necessary parameter value has not been specified. (parameter = *aa...aa*)	Details A required parameter value has not been specified. *aa...aa*: Parameter name Action Make sure that the parameters for the `DLMgetras` utility for collecting HDLM error information are

Message ID	Message Text	Explanation
		appropriate, and then try again. For details on the `DLMgetras` utility, see *The DLMgetras utility for collecting HDLM error information on page 7-2*.
KAPL10048-E	An error occurred in internal processing of the utility for collecting HDLM error information. Details = *aa...aa*, *bb...bb*	Details *aa...aa*: Error number (character string) *bb...bb*: Error number (character string) Action Contact your HDLM vendor or the maintenance company if there is a maintenance contract for HDLM.
KAPL10956-W	An attempt to connect to the specified server has failed.	Details An attempt to connect to the specified host has failed. Action Check the host name, user name or password that was specified in the `DLMgetras` utility for collecting HDLM error information, and then retry. For details on the `DLMgetras` utility, see *The DLMgetras utility for collecting HDLM error information on page 7-2*.
KAPL10957-W	The utility for collecting HDLM error information cannot be executed because the VMware vSphere CLI or VMware PowerCLI is not installed.	Details The utility for collecting HDLM error information (`DLMgetras`) was not executed in the command prompt of the VMware vSphere CLI or in the command prompt of PowerShell. Action If you are using the VMware vSphere CLI, execute the `DLMgetras` utility in the command prompt of the VMware vSphere CLI. If you are using the VMware PowerCLI, execute the `DLMgetras` utility in the command prompt of PowerShell.

KAPL11001 to KAPL12000

Message ID	Message Text	Explanation
KAPL11901-I	*aa...aa* has started.	Details The operation has started on the host. *aa...aa* : Operation (character string) o `Get Path Information` o `Get Option Information` o `Set Option Information` o `Clear Data` o `Get HDLM Manager Status` o `Get HDLM Driver Status` o `Get HDLM Alert Driver Status` o `Get SNMP Trap Information` o `Set SNMP Trap Information` o `Set LU Load Balance` o `Get Path Status Log Information` o `Get Local Time` o `Get ESXi Information` o `Add Path Information` o `Delete Path Information` o `Set Storage Identification Information` Action None.
KAPL11902-I	*aa...aa* has started. PathID = *bb...bb*	Details The operation has started on the host. *aa...aa*: Operation (character string) o `Online` o `Offline` *bb...bb*: The Path ID of the target path (decimal number) Action None.
KAPL11903-I	*aa...aa* has completed normally.	Details The operation has completed normally on the host. *aa...aa*: Any of the following operations (character string)

Message ID	Message Text	Explanation
		o Get Path Information o Get Option Information o Set Option Information o Clear Data o Get HDLM Driver Status o Get HDLM Manager Status o Get HDLM Alert Driver Status o Online o Offline o Get SNMP Trap Information o Set SNMP Trap Information o Set LU Load Balance o Get Path Status Log Information o Get Local Time o Get ESXi Information o Add Path Information o Delete Path Information o Set Storage Identification Information Action None.
KAPL11904-E	*aa...aa* has completed abnormally. Error status = *bb...bb*	Details The operation has completed abnormally on the host. *aa...aa*: Operation (character string) o Get Path Information o Get Option Information o Set Option Information o Clear Data o Get HDLM Driver Status o Get HDLM Manager Status o Get HDLM Alert Driver Status o Online o Offline o Get SNMP Trap Information o Set SNMP Trap Information o Set LU Load Balance o Get Path Status Log Information

Message ID	Message Text	Explanation
		○ `Get ESXi Information` ○ `Add Path Information` ○ `Delete Path Information` ○ `Set Storage Identification Information` *bb...bb*: Error status returned from API (character string) Action Execute the `DLMgetras` utility for collecting HDLM error information, and then contact your HDLM vendor or the maintenance company if you have a maintenance contract for HDLM. For details on the `DLMgetras` utility, see *The DLMgetras utility for collecting HDLM error information on page 7-2*.
KAPL11905-E	An unexpected error occurred.	Details An exception occurred during processing on the host. Action Execute the `DLMgetras` utility for collecting HDLM error information, and then contact your HDLM vendor or the maintenance company if you have a maintenance contract for HDLM. For details on the `DLMgetras` utility, see *The DLMgetras utility for collecting HDLM error information on page 7-2*.
KAPL11906-I	GUI information - *aa...aa*	Details This information is required for resolving problems. *aa...aa*: Trace information (character string) Action None.
KAPL11907-I	XML reception - *aa...aa*	Details This information is required for resolving problems. *aa...aa*: XML information (character string) Action None.
KAPL11908-I	XML transmission - *aa...aa*	Details

Message ID	Message Text	Explanation
		This information is required for resolving problems. *aa...aa*: XML information (character string) Action None.

KAPL13001 to KAPL14000

Message ID	Message Text	Explanation
KAPL13031-I	The utility for displaying HDLM performance information (dlmperfinfo) will now start. Start time = *aa...aa*	Details The utility for displaying HDLM performance information (`dlmperfinfo`) will now start. *aa...aa*: Year (4 digits)/month/day hour:minute:second (Start time) Action None.
KAPL13032-I	The utility for displaying HDLM performance information (dlmperfinfo) finished. End time = *aa...aa*	Details The utility for displaying HDLM performance information (`dlmperfinfo`) finished. *aa...aa*: Year (4 digits)/month/day hour:minute:second (End time) Action None.
KAPL13033-E	An attempt to execute the utility for displaying HDLM performance information (dlmperfinfo) failed.	Details An attempt to execute the utility for displaying HDLM performance information (`dlmperfinfo`) failed. Action Check the actions to take described in the message that was output just before this message.
KAPL13034-W	The utility for displaying HDLM performance information (dlmperfinfo) was terminated. End time = *aa...aa*	Details The utility for displaying HDLM performance information (`dlmperfinfo`) was terminated. *aa...aa*: Year (4 digits)/month/day hour:minute:second (End time) Action Check the actions to take described in the message that was output just before this message.

Message ID	Message Text	Explanation
KAPL13035-W	You do not have permission to execute the utility for displaying HDLM performance information (dlmperfinfo).	Details You do not have permission to execute the utility for displaying HDLM performance information (`dlmperfinfo`). Re-execute the `dlmperfinfo` utility as a user with administrator group permissions. Action Re-execute the utility as a user with administrator group permissions.
KAPL13036-W	The utility for displaying HDLM performance information (dlmperfinfo) is already being executed.	Details The utility for displaying HDLM performance information (`dlmperfinfo`) is already being executed. Action Wait for the `dlmperfinfo` utility to finish, and then execute the utility again.
KAPL13037-W	A parameter value is invalid. parameter = *aa...aa*, parameter value = *bb...bb*	Details An invalid parameter value is specified. *aa...aa*: Specified parameter (character string) *bb...bb*: Specified parameter value (character string) Action Check the parameters of the utility for displaying HDLM performance information (`dlmperfinfo`), and then execute the utility again. For details on the `dlmperfinfo` utility, see *The utility for displaying HDLM performance information (dlmperfinfo) on page 7-8*.
KAPL13038-W	A parameter is invalid. parameter = *aa...aa*	Details An invalid parameter is specified. *aa...aa*: Specified parameter (character string) Action Check the parameters of the utility for displaying HDLM performance information (`dlmperfinfo`), and then execute the utility again. For details on the `dlmperfinfo` utility, see *The utility for displaying HDLM*

Message ID	Message Text	Explanation
		performance information (dlmperfinfo) on page 7-8.
KAPL13039-W	A parameter is duplicated. parameter = *aa...aa*	Details A duplicate parameter is specified. *aa...aa*: Duplicated parameter (character string) Action Delete the duplicate parameter, and then execute the utility again.
KAPL13040-W	The specified file already exists.	Details The specified file already exists. Action Do not specify an existing file name in the parameter of the utility for displaying HDLM performance information (`dlmperfinfo`). If you want to overwrite an existing file, use the `-o` parameter.
KAPL13041-E	An attempt to output the file failed. File name = *aa...aa*, Error code = *bb...bb*	Details An attempt to output the file failed. *aa...aa*: File name (character string) *bb...bb*: Error code (decimal number) Action For a description of how to check whether there is sufficient space on your disk, see The utility for displaying HDLM performance information (dlmperfinfo) on page 7-8 in the manual. If there is sufficient space, contact your HDLM vendor or your maintenance company, if you have a maintenance contract for HDLM.
KAPL13042-E	The utility cannot be executed due to insufficient memory. Details = *aa...aa*	Details The memory required for processing the utility for displaying the HDLM performance information (`dlmperfinfo`) could not be allocated. *aa...aa*: Detailed information (character string) Action Close any applications that are not immediately necessary to increase

Message ID	Message Text	Explanation
		the amount of free memory, or restart the host.
KAPL13043-E	An error occurred in the internal processing of the utility. Details = *aa...aa*	Details An error occurred in the internal processing of the utility for displaying HDLM performance information (`dlmperfinfo`). *aa...aa*: Detailed information (character string) Action Collect detailed information, and then contact your HDLM vendor or your maintenance company, if you have a maintenance contract for HDLM.
KAPL13044-W	The path configuration was changed during the execution of the utility.	Details The path configuration was changed during the execution of the utility for displaying HDLM performance information (`dlmperfinfo`). Action Do not change the path configuration during the execution of the `dlmperfinfo` utility.
KAPL13045-W	The user terminated the utility.	Details The process was terminated during the execution of the utility for displaying HDLM performance information (`dlmperfinfo`) because an operation, such as Ctrl +C, was performed. Action None.
KAPL13046-W	No path is managed by HDLM.	Details There is no path managed by HDLM. Action Check the system configuration.
KAPL13047-I	Performance information is now being measured. (*aa...aa* / *bb...bb*)	Details Performance information is now being measured *aa...aa*: Execution count (decimal number) *bb...bb*: Count specified by the `-c` parameter (decimal number) Action

Message ID	Message Text	Explanation
		None.
KAPL13053-E	An attempt to connect to the specified host has failed.	Details A connection to the specified host cannot be established. Action Check the following: ○ The specified host name, user name, and password are correct. ○ The connection-destination host is running. ○ HDLM is installed on the connection-destination host. The version of HDLM installed on the connection-destination host is version 8.6.0-00 or later. For details on this error, see the VMware vSphere CLI messages that were displayed before this message.
KAPL13054-E	The utility for displaying HDLM performance information (dlmperfinfo) cannot be executed, because the VMware vSphere CLI or VMware PowerCLI is not installed.	Details The VMware vSphere CLI or VMware PowerCLI might not be installed. Action ○ If vCLI was specified for dlmrmcenv --cli, install VMware vSphere CLI, and then re-execute the utility for displaying HDLM performance information (`dlmperfinfo`). If the VMware vSphere CLI is already installed, execute the `dlmperfinfo` utility in the command prompt of the VMware vSphere CLI. ○ If PowerCLI was specified for dlmrmcenv --cli, install VMware PowerCLI, and then re-execute the utility for displaying HDLM performance information (`dlmperfinfo`). If the VMware vSphere CLI is already installed, execute the `dlmperfinfo` utility in the command prompt of the Windows PowerShell.
KAPL13055-E	An attempt to connect to the HDLM driver has failed.	Details The utility for displaying HDLM performance information

Message ID	Message Text	Explanation
		(`dlmperfinfo`) cannot acquire the performance information of the ESXi server, because the HDLM driver cannot be accessed. Action Make sure that HDLM is still installed on the host. If it has been removed, execute the utility for collecting HDLM error information (`DLMgetras`) to collect error information, and then contact your vendor or your maintenance company if you have a maintenance contract for HDLM.
KAPL13056-W	The utility was not executed from the VMware vSphere CLI command prompt.	Details The utility was not executed from the VMware vSphere CLI command prompt. Action Execute the utility from the VMware vSphere CLI command prompt.
KAPL13057-E	The utility cannot be executed, because HDLM for Windows is installed.	Details HDLM for Windows and HDLM for VMware cannot be used on the same host. Action Remove HDLM for Windows.
KAPL13058-W	An attempt to open the file has failed. file = *aa...aa*, details = *bb...bb*	Details An attempt to open a file has failed. *aa...aa*: File path name (character string) *bb...bb*: Detailed information (character string) Action Check the detailed information that is displayed after the file name, remove the cause of the error, and then re-execute the utility for displaying HDLM performance information (`dlmperfinfo`).
KAPL13059-W	No paths are managed by the PSPs provided by HDLM.	Details No paths are managed by the PSPs provided by HDLM. Action Acquire the performance information by performing a

Message ID	Message Text	Explanation
		vSphere audit or by using the performance function.
KAPL13060-W	A file output as a CSV file that is to be deleted by rotation could not be deleted. file name = *aa...aa*	Details A file output as a CSV file that is to be deleted by rotation could not be deleted. *aa...aa*: File name of the output CSV file (character string) Action If you are accessing the file to be deleted, release the file.
KAPL13061-W	A parameter that cannot be specified when a value other than 0 is specified for the -c parameter was specified. parameter = *aa...aa*	Details A parameter that cannot be specified when a value other than 0 is specified for the `-c` parameter was specified. *aa...aa*: Parameter name Action Execute the utility for displaying HDLM performance information (`dlmperfinfo`) with the `-h` parameter specified, check the parameters, and then execute the utility again.
KAPL13062-I	Performance information is now being measured. (*aa...aa bb...bb* / *cc...cc*)	Details Performance information is now being measured. *aa...aa*: File name of the output CSV file (character string) *bb...bb*: Number of measurements per file (decimal number) *cc...cc*: Total number of measurements per file (decimal number) Action None.
KAPL13081-I	Parameters = *aa...aa*	Details *aa...aa*: The parameters specified with the dlmperfinfo utility Action None.
KAPL13082-I	Data for maintenance: *aa...aa*	Details *aa...aa*: Maintenance information Action None.

Message ID	Message Text	Explanation
KAPL13091-W	The initialization of HNTRLib2 failed. The trace information is not output. Details = *aa...aa*	Details The Hitachi Network Objectplaza Trace Library (HNTRLib2) failed to be initialized. The trace information of the dlmperfinfo utility is not output to the file `dlmperfinfo[1-2].log`. *aa...aa*: Detailed information (character string) Action Contact your HDLM vendor or the maintenance company if there is a maintenance contract for HDLM.
KAPL13604-W	An error occurred during processing to read the audit log configuration file.	Details An internal error occurred during processing to read the audit log configuration file. Action Contact your HDLM vendor or maintenance company if there is a maintenance contract for HDLM.
KAPL13605-W	An error occurred during processing to output the audit log configuration file.	Details An internal parameter error occurred during output of the audit log data. Action Contact your HDLM vendor or maintenance company if there is a maintenance contract for HDLM.
KAPL13606-W	An error occurred during processing to output the audit log configuration file.	Details An internal error occurred during output of the audit log data. Action Contact your HDLM vendor or maintenance company if there is a maintenance contract for HDLM.

KAPL15001 to KAPL16000

Message ID	Message Text	Explanation
KAPL15060-I	DLMgetras was invoked. Command Line = *aa...aa*	Details *aa...aa*: Name of the utility that the user executed

Message ID	Message Text	Explanation
KAPL15061-I	DLMgetras successfully executed. Command Line = *aa...aa*	Details *aa...aa*: Name of the utility that the user executed
KAPL15101-I	Clear operation was completed successfully. Command Line = *aa...aa*	Details *aa...aa*: Command that the user executed
KAPL15102-W	Clear operation has failed. Command Line = *aa...aa*	Details *aa...aa*: Command that the user executed
KAPL15103-I	*aa...aa* path(s) were successfully placed *bb...bb*. *cc...cc* path(s) were not. Command Line = *bb...bb*	Details *aa...aa*: Number of paths where online/offline is successful *bb...bb*: `Online`, `Online(S)`, `Online(D)` or `Offline(c)` *cc...cc*: Number of paths where online/offline is unsuccessful
KAPL15104-W	*aa...aa* path(s) were failed to place *bb...bb*. Command Line = *cc...cc*	Details *aa...aa*: Number of paths that failed to be placed online or offline *bb...bb*: `Online` or `Offline(c)` *cc...cc*: Command that the user executed
KAPL15105-I	Setting up the operating environment succeeded. Command Line = *aa...aa*	Details *aa...aa*: Command that the user executed
KAPL15106-W	Setting up the operating environment failed. Command Line = *aa...aa*	Details *aa...aa*: Command that the user executed
KAPL15107-I	Program information was successfully displayed. Command Line = *aa...aa*	Details *aa...aa*: Command that the user executed
KAPL15108-W	An attempt to display program information has failed. Command Line = *aa...aa*	Details *aa...aa*: Command that the user executed
KAPL15109-I	Information about HDLM-management targets was successfully displayed. Command Line = *aa...aa*	Details *aa...aa*: Command that the user executed
KAPL15110-W	An attempt to display information about HDLM-management targets has failed. Command Line = *aa...aa*	Details *aa...aa*: Command that the user executed
KAPL15111-W	The HDLM command was started or stopped by the user who does not have the	Details

Message ID	Message Text	Explanation
	authority. Command Line = *aa...aa*	*aa...aa*: Command that the user executed
KAPL15116-I	*bb...bb* path(s) were successfully placed *aa...aa*. *dd...dd* path(s) were successfully placed *cc...cc*. *ee...ee* path(s) were not. Command Line = online	Details *aa...aa*: `Online` or `Online(S)` *bb...bb*: The number of paths which changed to the `Online` or `Online(S)` status *cc...cc*: `Online(S)`, `Online(D)` or `Online(S)`/`Online(D)` *dd...dd*: The number of paths which changed to the `Online(S)` or `Online(D)` status *ee...ee*: The number of paths which failed to change to either the `Online`, `Online(S)` or `Online(D)` status
KAPL15121-I	The storage system settings were successfully refreshed. Command Line = *aa...aa*	Details *aa...aa*: Command that the user executed
KAPL15122-W	The refresh of the storage system settings failed. Command Line = *aa...aa*	Details *aa...aa*: Command that the user executed
KAPL15320-I	The dlmperfinfo utility successfully started. Command Line = *aa...aa*	Details *aa...aa*: Command that the user executed
KAPL15321-W	Could not start the dlmperfinfo utility. Command Line = *aa...aa*	Details *aa...aa*: Command that the user executed
KAPL15322-I	The dlmperfinfo utility successfully stopped. Command Line = *aa...aa*	Details *aa...aa*: Command that the user executed
KAPL15323-W	The dlmperfinfo utility terminated. Command Line = *aa...aa*	Details *aa...aa*: Command that the user executed
KAPL15401-I	HDLM Manager successfully started.	-
KAPL15402-W	Could not start the HDLM manager.	-
KAPL15403-I	HDLM Manager successfully stopped.	-
KAPL15404-W	The HDLM Manager was executed by the user who does not have the authority.	-

KAPL20001 to KAPL21000

Message ID	Message Text	Explanation
KAPL20001-I	The initialization of the plugin (HTI_SATP_HDLM) was successful.	Details The initialization of the `HTI_SATP_HDLM` plugin has successful. Action None.
KAPL20009-I	The termination of the plugin (HTI_SATP_HDLM) was successful.	Details The termination of the `HTI_SATP_HDLM` plugin successful. Action None.
KAPL20021-I	The state of path (*aa...aa*) was changed from *bb...bb* to *cc...cc*.	Details The path state changed. *aa...aa*: Name of Path that changed state *bb...bb*: Path state before change *cc...cc*: Path state after change Action None.
KAPL20022-W	The state of path (*aa...aa*) was changed from *bb...bb* to *cc...cc*.	Details The path state changed to a state where I/Os cannot be issued. *aa...aa*: Name of Path that changed state *bb...bb*: Path state before change *cc...cc*: Path state after change Action Check the status of the path where the error was detected.
KAPL20023-E	The state of path (*aa...aa*) was changed from *bb...bb* to *cc...cc*.	Details The path state changed to a state where I/Os cannot be issued. *aa...aa*: Name of Path that changed state *bb...bb*: Path state before change *cc...cc*: Path state after change Action Check the status of the path where the error was detected.
KAPL20024-W	I/O (*aa...aa*) to path (*bb...bb*) failed. Sense key=*cc...cc* ASC/ASCQ=*dd...dd*	Details An I/O error occurred. *aa...aa*: SCSI command

Message ID	Message Text	Explanation
		bb...bb: Name of Path that had I/O error *cc...cc*: Sense Key *dd...dd*: Additional Sense Code and Additional Sense Code Qualifier Action According to the explanation of Sense Code and Additional Sense Code, check the status of the path where the error was detected.
KAPL20025-W	I/O (*aa...aa*) to path (*bb...bb*) failed. Plugin status=*cc...cc*	Details An I/O error occurred. *aa...aa*: SCSI command *bb...bb*: Name of Path that had I/O error *cc...cc*: Plugin status Action Execute the `DLMgetras` utility for collecting HDLM error information, and then contact your HDLM vendor or the maintenance company if there is a maintenance contract for HDLM. For details on the `DLMgetras` utility, see *The DLMgetras utility for collecting HDLM error information on page 7-2*.
KAPL20026-W	I/O (*aa...aa*) to path (*bb...bb*) failed. Host status=*cc...cc*	Details An I/O error occurred. *aa...aa*: SCSI command *bb...bb*: Name of Path that had I/O error *cc...cc*: Host status Action Execute the `DLMgetras` utility for collecting HDLM error information, and then contact your HDLM vendor or the maintenance company if there is a maintenance contract for HDLM. For details on the `DLMgetras` utility, see *The DLMgetras utility for collecting HDLM error information on page 7-2*.
KAPL20027-W	I/O (*aa...aa*) to path (*bb...bb*) failed. Device status=*cc...cc*	Details An I/O error occurred. *aa...aa*: SCSI command

Message ID	Message Text	Explanation
		bb...bb: Name of Path that had I/O error *cc...cc*: Device status Action Execute the `DLMgetras` utility for collecting HDLM error information, and then contact your HDLM vendor or the maintenance company if there is a maintenance contract for HDLM. For details on the `DLMgetras` utility, see *The DLMgetras utility for collecting HDLM error information on page 7-2*.
KAPL20028-I	The owner controller of device (*aa...aa*) was changed to (*bb...bb*).	Details The owner controller of the LU connected to the path with the ID shown in the message was changed. *aa...aa*: Path ID of the changed LU. (same as PathID of `view -path`) (Decimal number) *bb...bb*: Owner controller ID after the change. (Hexadecimal number) Action None.
KAPL20029-I	The owner core of device (*aa...aa*) was changed to (*bb...bb*).	Details The owner core of the LU connected to the path with the ID shown in the message was changed. *aa...aa*: Path ID of the changed LU. (same as PathID of `view -path`) (Decimal number) *bb...bb*: Owner core ID after the change. (Hexadecimal number) Action None.
KAPL20031-E	A primary volume of HAM pair (*aa...aa*) was blocked.	Details The primary volume of HAM pair was blocked. *aa...aa*: Name of primary volume of HAM pair that is blocked Action Recover the path for the primary volume of the HAM pair, and resynchronize the HAM pair. After

Message ID	Message Text	Explanation
		that, release the blocked state of the primary volume.
KAPL20032-I	A primary volume of HAM pair (*aa...aa*) was released.	Details The primary volume of HAM pair was released. *aa...aa*: Name of primary volume of HAM pair that was released Action None.
KAPL20033-E	A parameter is invalid. Parameter = "*aa...aa*"	Details The parameter specified in esxcli command (nmp satp setconfig) is invalid. *aa...aa*: Specified parameter Action Check the parameter you specified. Specify the correct parameter and retry the esxcli command.
KAPL20034-E	The device (*aa...aa*) is not HAM pair.	Details The device name specified for -d option of esxcli command (nmp satp setconfig --config pvolrel) is not device (HAM pair). *aa...aa*: Name of device (HAM pair) specified for -d option Action Check the parameter you specified. Specify the correct parameter and retry the esxcli command.
KAPL20035-E	The target HAM pair (*aa...aa*) has already been released.	Details The device name(HAM pair) specified for -d option of esxcli command (nmp satp setconfig --config pvolrel) was already released. *aa...aa*: Name of device (HAM pair) specified for -d option Action Check the parameter you specified. Specify the correct parameter and retry the esxcli command.
KAPL20036-E	An attempt to release the primary volume of HAM pair (*aa...aa*) has failed.	Details An attempt to release the primary volume of HAM pair specified for -d option of esxcli command (nmp

Message ID	Message Text	Explanation
		satp setconfig --config pvolrel) has failed. *aa...aa*: Name of device (HAM pair) specified for -d option Action Wait a while, and then try again.
KAPL20041-W	The state of path (*aa...aa*) was not able to be updated.	Details *aa...aa*: Name of Path that was not able to be updated. Action Execute the `DLMgetras` utility for collecting HDLM error information, and then contact your HDLM vendor or the maintenance company if there is a maintenance contract for HDLM. For details on the `DLMgetras` utility, see *The DLMgetras utility for collecting HDLM error information on page 7-2*.
KAPL20042-W	The state of path (*aa...aa*) was not able to be updated. Plugin status=*bb...bb*	Details *aa...aa*: Name of Path that was not able to be updated. *bb...bb*: Plugin status Action Execute the `DLMgetras` utility for collecting HDLM error information, and then contact your HDLM vendor or the maintenance company if there is a maintenance contract for HDLM. For details on the `DLMgetras` utility, see *The DLMgetras utility for collecting HDLM error information on page 7-2*.
KAPL20043-W	The state of path (*aa...aa*) was not able to be updated. Host status=*bb...bb*	Details *aa...aa*: Name of Path that was not able to be updated. *bb...bb*: Host status Action Execute the `DLMgetras` utility for collecting HDLM error information, and then contact your HDLM vendor or the maintenance company if there is a maintenance contract for HDLM. For details on the `DLMgetras` utility, see *The DLMgetras utility for collecting HDLM error information on page 7-2*.

Message ID	Message Text	Explanation
KAPL20044-W	The state of path (*aa...aa*) was not able to be updated. Device status=*bb...bb*	Details *aa...aa*: Name of Path that was not able to be updated. *bb...bb*: Device status Action Execute the `DLMgetras` utility for collecting HDLM error information, and then contact your HDLM vendor or the maintenance company if there is a maintenance contract for HDLM. For details on the `DLMgetras` utility, see *The DLMgetras utility for collecting HDLM error information on page 7-2*.
KAPL20045-W	The state of path (*aa...aa*) was not able to be updated. Sense key=*bb...bb* ASC/ASCQ=*cc...cc*	Details *aa...aa*: Name of Path that was not able to be updated. *bb...bb*: Sense key *cc...cc*: ASC/ASCQ Action According to the explanation of Sense Code, check the status of the storage.
KAPL20050-E	An error occurred in all the paths of the device (*aa...aa*).	Details A problem such as a disconnection caused an error in the last online path of the device. *aa...aa*: Device name Action See "*What to do for a path error on page 5-2* Actions taken for a path error", check the status of the device shown in the message and all the paths of that device, resolve the error, and then switch the paths to online.
KAPL20051-E	No path connected to the device (*aa...aa*) is in the `Online(D)` status.	Details Due to path failure, path deletion, or offline operation, no path connected to the LU (*aa...aa*) is in the `Online(D)` status. *aa...aa*: Device name (same as HDevName of "`dlnkmgr view -path`" command) Action To return a path to the `Online(D)` status, resolve the path failure,

Message ID	Message Text	Explanation
		and then execute the "`dlnkmgr online -dfha`" command.
KAPL20060-W	Failed to get Inquiry Page.*aa...aa* in path (*bb...bb*).	Details Failed to obtain the Inquiry data of the path to show in a message. *aa...aa*: Page name of the Inquiry data which failed to get it. *bb...bb*: Path ID (same as PathID of `view -path`) (decimal (base-10) number) Action Confirm the state of the path. After having removed an obstacle, and then execute the "`dlnkmgr refresh`" command.
KAPL20902-E	A parameter is invalid. parameter = *aa...aa*	Details A parameter is invalid. *aa...aa*: The specified parameter Action Specify the `-h` parameter for the utility for configuring HDLM remote management client environments (`dlmrmcenv`), confirm the parameter that should be specified, and then retry the operation. For details on the `dlmrmcenv` utility, see *The dlmrmcenv utility for configuring HDLM remote management client environments on page 7-21*.
KAPL20903-E	The specified Credential store file does not exist. Value = *aa...aa*	Details The Credential Store file that was specified at execution of the utility for configuring HDLM remote management client environments (`dlmrmcenv`) does not exist. *aa...aa*: input file name Action Check the input Credential Store file, and then retry. For details on the `dlmrmcenv` utility, see *The dlmrmcenv utility for configuring HDLM remote management client environments on page 7-21*.
KAPL20904-E	The Credential store file does not exist. Value = *aa...aa*	Details The Credential Store file does not exist at execution of the utility for configuring HDLM remote

Message ID	Message Text	Explanation
		management client environments (`dlmrmcenv`). *aa...aa*: input file name Action Check the Credential Store file, and then retry. For details on the `dlmrmcenv` utility, see *The dlmrmcenv utility for configuring HDLM remote management client environments on page 7-21*.
KAPL20905-E	The VMware vSphere CLI information could not be acquired.	Details The VMware vSphere CLI information could not be acquired. Action Make sure that the environment variable of VMware vSphere CLI. Make sure that the command is executed by a VMware vSphere CLI. If you use VMware PowerCLI, use the dlmrmcenv utility to specify VMware PowerCLI in the CLI.
KAPL20906-E	An internal error occurred in the dlmrmcenv utility. Error Code = *aa...aa*	Details An internal error occurred in the utility for configuring HDLM remote management client environments (`dlmrmcenv`). *aa...aa*: Error number Action Contact your HDLM vendor or the maintenance company if there is a maintenance contract for HDLM.
KAPL20907-I	The dlmrmcenv utility completed normally.	Details The utility for configuring HDLM remote management client environments (`dlmrmcenv`) ended normally. Action None.
KAPL20908-W	You lack privileges for executing the utility for Configuring HDLM Remote Management Client Environments.	Details The utility for configuring HDLM remote management client environments (`dlmrmcenv`) must be executed by a user who is a member of the Administrators group. Action

Message ID	Message Text	Explanation
		Re-execute the utility as a user who is a member of the Administrators group.
KAPL20951-I	The dlmcreatecredstore utility finished.	Details The `dlmcreatecredstore` utility finished. Action None.
KAPL20952-E	An attempt to execute the dlmcreatecredstore utility has failed.	Details An attempt to execute the `dlmcreatecredstore` utility has failed. Action Check the actions to take described in the message that was output just before this message.
KAPL20953-E	An internal error occurred in the dlmcreatecredstore utility.	Details An internal error occurred in the `dlmcreatecredstore` utility. Action Contact your HDLM vendor or the maintenance company if there is a maintenance contract for HDLM.
KAPL20954-E	The dlmcreatecredstore utility is already running.	Details The `dlmcreatecredstore` utility is already running. Action After the `dlmcreatecredstore` utility finishes, execute the utility again.
KAPL20955-E	A parameter is invalid.	Details A parameter is invalid. Action Check the parameters of the `dlmcreatecredstore` utility, and then execute the utility again. For details on the `dlmcreatecredstore` utility, see *The utility for creating HDLM Credential Store (dlmcreatecredstore) on page 7-7*.
KAPL20956-E	The specified file does not exist. File name = *aa...aa*	Details The file specified in the `-f` parameter does not exist. *aa...aa*: File name Action

Message ID	Message Text	Explanation
		Check that the following file exists, and then execute the utility again. - The file specified in the `-f` parameter
KAPL20957-E	The length of the command run by the task exceeds 262 characters. Command = *aa...aa*	Details The length of the command run by the task exceeds 262 characters. *aa...aa*: Command string Action In the `-f` parameter, specify a file so that the command is no more than 262 characters long.
KAPL20958-E	There is an environment variable that has already been defined. Environment variable name = *aa...aa*	Details There is an environment variable that has already been defined. *aa...aa*: Environment variable name Action 1. End the command prompt of Windows PowerShell, and then try again as an administrator. 2. Execute the following command to display the environment variables. `dir env:` 3. Make sure that the environment variable in the displayed message has not been set, and then execute the `dlmcreatecredstore` utility again.
KAPL20959-E	A command required for processing the dlmcreatecredstore utility does not exist. Command name = *aa...aa*	Details A command required for processing the `dlmcreatecredstore` utility does not exist. *aa...aa*: Command name Action Make sure that the command displayed in the message exists in the PATH environment variable or the Path environment variable, and then execute the utility again.
KAPL20960-E	The folder does not exist. Folder name = *aa...aa*	Details The folder does not exist. *aa...aa*: Folder name Action

Message ID	Message Text	Explanation
		Contact your HDLM vendor or the maintenance company if there is a maintenance contract for HDLM.
KAPL20961-E	An attempt to register the task has failed. Registration command = *aa...aa*	Details An attempt to register the task has failed. *aa...aa*: Registration command Action Contact your HDLM vendor or the maintenance company if there is a maintenance contract for HDLM.
KAPL20962-E	An attempt to run the task has failed.	Details An attempt to run the task has failed. Action Contact your HDLM vendor or the maintenance company if there is a maintenance contract for HDLM.
KAPL20963-E	A timeout occurred during the wait for the task to finish.	Details The task did not finish within 20 seconds. Action 1. Make sure that the previous result was an expected value by executing the following command. Usually, `0` is displayed if the result is normal. `schtasks.exe /Query /v /FO list /TN HDLM_dlmcreatecredstore` 2. Check the contents of the PowerShell script specified in the `-f` option, modify the script if necessary, and then execute the script again.
KAPL20964-E	An attempt to complete the task has failed.	Details An attempt to complete the task has failed. Action Contact your HDLM vendor or the maintenance company if there is a maintenance contract for HDLM.
KAPL20965-E	An attempt to delete the task has failed.	Details An attempt to delete the task has failed. Action

Message ID	Message Text	Explanation
		Contact your HDLM vendor or the maintenance company if there is a maintenance contract for HDLM.
KAPL20966-E	An attempt to change the owner of the Credential Store file has failed. File name = *aa...aa*, Return value = *bb...bb*	Details An attempt to change the owner of the Credential Store file has failed. *aa...aa*: File name *bb...bb*: Return value Action Contact your HDLM vendor or the maintenance company if there is a maintenance contract for HDLM.
KAPL20967-E	An attempt to change the access permission of the Credential Store file has failed. File name = *aa...aa*, User name = *bb...bb*, Return value = *cc...cc*	Details An attempt to change the access permission of the Credential Store file has failed. *aa...aa*: File name *bb...bb*: User name *cc...cc*: Return value Action Contact your HDLM vendor or the maintenance company if there is a maintenance contract for HDLM.

KAPL21001 to KAPL22000

Message ID	Message Text	Explanation
KAPL21001-I	The initialization of the pspPlugin (*aa...aa*) was successful.	Details The initialization of the `HTI_PSP_HDLM` plugin has successful. *aa...aa*: `HTI_PSP_HDLM_EXLBK`, `HTI_PSP_HDLM_EXLIO`, or `HTI_PSP_HDLM_EXRR` Action None.
KAPL21009-I	The termination of the pspPlugin (*aa...aa*) was successful.	Details The termination of the `HTI_PSP_HDLM` plugin successful. *aa...aa*: `HTI_PSP_HDLM_EXLBK`, `HTI_PSP_HDLM_EXLIO`, or `HTI_PSP_HDLM_EXRR` Action

Message ID	Message Text	Explanation
		None.

Return codes for Hitachi Command Suite Common Agent Component

When an operation requested of HDLM from Global Link Manager terminates abnormally, or terminates normally with a warning, HDLM outputs one of the return codes described below.

Return Code	Explanation
1002	Details There is no path on which the operation can be performed. Action Refresh the host information, check the path status, and then perform the operation again.
1003	Details No path was detected. Action Check whether a path between the host and the storage system is connected. If a path is connected, check whether HDLM is configured correctly.
1004	Details Memory required for HDLM internal processing could not be allocated. Action Terminate unnecessary applications to increase free memory, or restart the host.
1006	Details An `Offline` path cannot be placed `Online`. Action Remove the error in the path, and then retry.
1007	Details The target path of the offline operation is the last, remaining path connected to the device and therefore, cannot be placed in the offline status. Action Click **Refresh** to update the host information, check the path status, and then retry the offline operation.
1015	Details The `Offline` path cannot be placed `Online`. Action Remove the error in the path, and then retry.

Return Code	Explanation
1016	Details The target path(s) are already `Online`. Action Update the host information, and then check the path status.
1017	Details The target path(s) are already `Offline(C)`. Action Update the host information, and then check the path status.
1019	Details Acquisition of HDLM Manager information failed. Action Execute the `DLMgetras` utility for collecting HDLM error information, and then contact your HDLM vendor or the maintenance company if you have a maintenance contract for HDLM. For details on the `DLMgetras` utility, see *The DLMgetras utility for collecting HDLM error information on page 7-2*.
1020	Details An unexpected error occurred during HDLM internal processing. Action Execute the `DLMgetras` utility for collecting HDLM error information, and then contact your HDLM vendor or the maintenance company if you have a maintenance contract for HDLM. For details on the `DLMgetras` utility, see *The DLMgetras utility for collecting HDLM error information on page 7-2*.
1022	Details Batch registration of `Offline` processing was performed. Action Refresh the host information, and then check the path status.
1023	Details Batch registration of `Offline` processing has already been performed. Action Refresh the host information, and then check the path status.
1025	Details A parameter value is invalid. Action Refresh the host information, and then perform the operation again. If the same error occurs again, execute the `DLMgetras` utility for collecting HDLM error information, and then contact your HDLM vendor or maintenance company if you have a maintenance contract for HDLM. For details on the `DLMgetras` utility, see *The DLMgetras utility for collecting HDLM error information on page 7-2*.
1026	Details

Return Code	Explanation
	The acquisition of path information has been aborted, because the path configuration was changed while the system was attempting to acquire the path information. Action Refresh the host information, check the path status, and then perform the operation again.
1033	Details An attempt to acquire the HDLM version information failed. Action Re-execute the command. If the same error occurs again, execute the `DLMgetras` utility for collecting HDLM error information, and then contact your HDLM vendor or maintenance company if there is a maintenance contract for HDLM. For details on the `DLMgetras` utility, see *The DLMgetras utility for collecting HDLM error information on page 7-2*.
1034	Details An attempt to acquire information about the HDLM version or SP version has failed. Action Re-execute the command. If the same error occurs again, execute the `DLMgetras` utility for collecting HDLM error information, and then contact your HDLM vendor or maintenance company if there is a maintenance contract for HDLM. For details on the `DLMgetras` utility, see *The DLMgetras utility for collecting HDLM error information on page 7-2*.
1035	Details An attempt to acquire information about the HDLM version or SP version has failed. Action Re-execute the command. If the same error occurs again, execute the `DLMgetras` utility for collecting HDLM error information, and then contact your HDLM vendor or maintenance company if there is a maintenance contract for HDLM. For details on the `DLMgetras` utility, see *The DLMgetras utility for collecting HDLM error information on page 7-2*.
1036	Details An attempt to acquire information about the HDLM version or SP version has failed. Action Re-execute the command. If the same error occurs again, execute the `DLMgetras` utility for collecting HDLM error information, and then contact your HDLM vendor or maintenance company if there is a maintenance contract for HDLM. For details on the `DLMgetras` utility, see *The DLMgetras utility for collecting HDLM error information on page 7-2*.
1037	Details A parameter is invalid.

Return Code	Explanation
	Action Refresh the host information, and then perform the operation again. If the same error occurs again, execute the `DLMgetras` utility for collecting HDLM error information, and then contact your HDLM vendor or maintenance company if you have a maintenance contract for HDLM. For details on the `DLMgetras` utility, see *The DLMgetras utility for collecting HDLM error information on page 7-2*.
1038	Details A storage system that cannot use the load balancing function is connected. Action Check the system configuration. One or more connected storage systems cannot use the load balancing function. The load balancing function does not operate on the LUs of such storage systems.
1041	Details An attempt to communicate with the HDLM manager has failed. Action Check whether the HDLM manager is running on the host. If it is not running, start the HDLM manager.
1042	Details Information about the path configuration on the specified LU does not match the path configuration information held by HDLM. Action Refresh the host information, check the path status, and then perform the operation again.
1043	Details The specified LU is part of a storage system that cannot use the load balancing function. Action Check the storage system of the LU that is connected by the specified path.
1045	Details A parameter is invalid. Action Refresh the host information, and then perform the operation again. If the same error occurs even again, execute the `DLMgetras` utility for collecting HDLM error information, and then contact your HDLM vendor or maintenance company if you have a maintenance contract for HDLM. For details on the `DLMgetras` utility, see *The DLMgetras utility for collecting HDLM error information on page 7-2*.
1046	Details A parameter is invalid. Action Refresh the host information, and then perform the operation again. If the same error occurs again, execute the `DLMgetras` utility for

Return Code	Explanation
	collecting HDLM error information, and then contact your HDLM vendor or maintenance company if you have a maintenance contract for HDLM. For details on the `DLMgetras` utility, see *The DLMgetras utility for collecting HDLM error information on page 7-2*.
1054	Details The specified storage system or LU cannot use the dynamic I/O path control function. Action None.
1055	Details Name resolution from a host name to an IP address failed. Action Verify that name resolution can be performed from the remote management client for host names, and then retry the operation. If the same error occurs again, execute the `DLMgetras` utility for collecting HDLM error information, and then contact your HDLM vendor or maintenance company if you have a maintenance contract for HDLM. For details on the `DLMgetras` utility, see *The DLMgetras utility for collecting HDLM error information on page 7-2*.
1056	Details One of the following caused a problem with communication between the remote management client and the host: ○ The host did not respond. ○ HDLM is not installed on the host. ○ Host authentication failed. ○ A communication error with the host occurred. Action Check the following: ○ Make sure the host can be accessed from the remote management client by using the command `dlnkmgr`. ○ After the `dlmrmcenv` utility was executed, the remote management client was restarted. ○ The paths for esxcli and perl have been added to the system environment variable Path. In addition, make sure the added paths are not enclosed in double quotation marks ("). ○ The version of the Credential Store file is 1.0 or 1.1. If the same error occurs again, execute the `DLMgetras` utility for collecting HDLM error information, and then contact your HDLM vendor or maintenance company if you have a maintenance contract for HDLM. For details on the `DLMgetras` utility, see *The DLMgetras utility for collecting HDLM error information on page 7-2*.
1059	Details The specified host is not registered in the Credential Store on the remote management client. Action

Return Code	Explanation
	Verify that the specified host is registered in the Credential Store on the remote management client. If the host is registered in the Credential Store, execute the `DLMgetras` utility for collecting HDLM error information, and then contact your HDLM vendor or maintenance company if you have a maintenance contract for HDLM. For details on the `DLMgetras` utility, see *The DLMgetras utility for collecting HDLM error information on page 7-2*.
1061	Details A value outside the valid range is specified for the check interval of the dynamic I/O path control function. Action Specify a value in the range from 5 through 1440 for the check interval of the dynamic I/O path control function, and then retry the operation.
1063	Details An attempt to update `global-active device non-preferred path option` failed. Action If a path error occurs during an update operation and this message is output, perform recovery for the path error to return the path to the online status, and then try the operation again. If this message is output when there are no offline paths, execute the `DLMgetras` utility for collecting HDLM error information, and then contact your HDLM vendor or maintenance company if you have a maintenance contract for HDLM.

Acronyms and abbreviations

The following acronyms and abbreviations might be used in this guide.

A

API
Application Programming Interface

ASC
Additional Sense Code

ASCQ
Additional Sense Code Qualifier

C

CHA
Channel Adapter

CLPR
Cache Logical Partition

CPU
Central Processing Unit

CSV
Comma Separated Value

CU
Control Unit

#	A	B	C	D	E	F	G	H	I	J	K	L	M	N	O	P	Q	R	S	T	U	V	W	X	Y	Z

D

DBMS
Database Management System

Dev
Device

DNS
Domain Name System

F

FC
Fibre Channel

FC-SP
Fibre Channel Security Protocol

FQDN
Fully Qualified Domain Name

G

GMT
Greenwich Mean Time

GUI
Graphical User Interface

H

HBA
Host Bus Adapter

HDev
Host Device

HLU
Host Logical Unit

#	A	B	C	D	E	F	G	H	I	J	K	L	M	N	O	P	Q	R	S	T	U	V	W	X	Y	Z

HTTP
Hypertext Transfer Protocol

I

I/O
Input/Output

IP
Internet Protocol

iSCSI
Internet Small Computer System Interface

L

LAN
Local Area Network

LDAP
Lightweight Directory Access Protocol

LDEV
Logical Device

LU
Logical Unit

N

NAS
Network Attached Storage

NIC
Network Interface Card

NMP
Native Multipathing Plugin

NTP
Network Time Protocol

#	A	B	C	D	E	F	G	H	I	J	K	L	M	N	O	P	Q	R	S	T	U	V	W	X	Y	Z

O

OS
Operating System

P

P
Port

PPM
Perl Package Module

PSP
Path Selection Plugin

R

RADIUS
Remote Authentication Dial In User Service

S

SAN
Storage Area Network

SATP
Storage Array Type Plugin

SCSI
Small Computer System Interface

SLPR
Storage Logical Partition

SNMP
Simple Network Management Protocol

SP
Service Pack

#	A	B	C	D	E	F	G	H	I	J	K	L	M	N	O	P	Q	R	S	T	U	V	W	X	Y	Z

SSL
Secure Sockets Layer

SVP
Service Processor

U

UID
User Identifier

W

WWN
World Wide Name

X

XML
Extensible Markup Language

Glossary

This glossary explains the terms used in this manual.

A

automatic failback

A function for checking the status of paths at regular intervals, and automatically placing the status of a path recovered from an error into the Online status.
If a path with an `Offline(E)` status recovers from an error, an automatic failback will place the path `Online`.
Automatic failbacks check the status of paths that were placed in the `Offline(E)` status because of an error, but do not check the status of paths that were placed in the `Offline(C)` status by executing an offline operation. For details on offline operations, see *6.4 offline (Places a Path or Paths Offline)*.

AutoPATH_ID

An ID that HDLM assigns to a path during the system startup. Every path has a unique AutoPATH_ID.
(See also: *path*)

B

boot disk environment

An environment in which the startup disk is in a storage system instead of in the host.

C

CHA (Channel Adapter)

An adapter for controlling the channels of a storage system.

#	A	B	C	D	E	F	G	H	I	J	K	L	M	N	O	P	Q	R	S	T	U	V	W	X	Y	Z

CLPR(Cache Logical Partition)

A function for logically splitting up a cache. This function can split up a cache into parity groups in the storage system, so that other parity groups do not affect the cache performance.

D

Dev (Device)

A target that HDLM controls and operates. A Dev is called a *device* in VMware vSphere.
In VMware vSphere, each LU has only one Dev.
Each Dev has a *Dev number*.
(See also: *Dev number*)

Dev number

A Dev number (the DNum column) in the configuration list in HDLM.
`0` is displayed as the number indicating the entire LU.
HDLM operates assuming that one LU has one Dev, so the Dev number is always fixed to `0`.
(See also: *Dev*)

E

emulation type

An LU type that is accessible from a host. Since an HDLM host is an open-system host such as a PC or a UNIX computer, the HDLM host can access only the LUs that have open-system emulation types.
For details on emulation types supported by a storage system, see the maintenance manual for that particular storage system.

F

failback

A function for placing the status of a path recovered from an error into the `Online` status, and then switching the access path to the path that was just recovered.

failover

A function for switching to another normal path if there is an error in the current access path, thereby enabling the system to continue to operate.

H

HAM environment
An environment in which volume pairs that are synchronized between two storage systems are created by HAM (High Availability Manager), and hosts are configured to recognize these volumes as one volume. An HAM environment consists of the primary volume (P-VOL) in the primary site and the secondary volume (S-VOL) in the secondary site. When an error occurs on one of the volumes, the path can be switched to the other volume by using HDLM.

HBA (Host Bus Adapter)
Device that functions as an interface connecting a host with external devices.
In this manual, the term *HBA* refers to an interface card installed in a host, in configurations where the host and storage units are connected via a FC connection.

HDLM driver
A program that controls all the HDLM functions, manages paths, and detects errors.

HDLM manager
A program that monitors the operational status of hosts by linking with Global Link Manager, when Global Link Manager is used to manage HDLM.

host
An ESXi server that connects to storage subsystems via a SAN.

host device
A logical area in a host LU.
(See also: *host LU*, *host device name*)

host device name
A name assigned to a host device.

host LU
An LU that a host recognizes. The actual HDev entity is a Dev in the storage system. Each host LU has a *host LU number*.
(See also: *LU*, *host LU number*, *host device*)

host LU number
A number assigned to a host LU. The host LU number is part of a path name.
(See also: *host LU*, *path name*)

I

intermittent error
An error that occurs irregularly due to, for example, a loose cable connection.

#	A	B	C	D	E	F	G	H	I	J	K	L	M	N	O	P	Q	R	S	T	U	V	W	X	Y	Z

L

LDEV (Logical Device)

A combination of the storage system's product name, serial number, and an internal LU. HDLM uses this value to identify a particular LU.

load balancing

Functionality for distributing the load across the paths that access each area within an LU. To distribute loads, load balancing uses multiple paths to perform I/O operations. HDLM provides a VMware vSphere path selection policy (PSP). HDLM can use the following load balancing algorithms:
- The Extended Round Robin algorithm
- The Extended Least I/Os algorithm
- The Extended Least Blocks algorithm
- The Most Recently Used algorithm (VMware)
- The Round Robin algorithm (VMware)

LU (Logical Unit)

A logical unit that is a logical volume defined in the storage system, and with which the host can perform input or output operations.
(See also: *host LU*)

N

non-owner controller

A controller that is not set as the controller responsible for LUs by the dynamic load balance controller function when the HUS100 series is used.
(See also: *owner controller*, *non-owner path*)

non-owner path

The following paths become non-owner paths:
- Paths that pass through a non-owner controller when the dynamic I/O path control function is enabled and the HUS100 series is used
- Paths for which the non-preferred path option is specified when the global-active device is used

(See also: *owner path*, *non-owner controller*)

O

owner controller

A controller that is set as the controller responsible for LUs by the dynamic load balance controller function when the HUS100 series is used.
(See also: *owner path*, *non-owner controller*)

owner path

All the paths other than the following paths are owner paths:
- Non-owner paths when the dynamic I/O path control function is enabled
- Non-owner paths when global-active device is used

(See also: *owner controller*, *non-owner path*)

P

path

An access path from a host to a storage system. Access to an area within an LU in a storage system is made via a cable connecting the HBA on the host and the CHA on the storage system. This cable is a path. Each path has an `AutoPATH_ID`.
(See also: *AutoPATH_ID*)

path health checking

A function for checking the status of paths at regular intervals.
When an error occurs on a path that was in the `Online` status, path health checking changes the status of the path to the `Offline(E)` status.
Path health checking checks only those paths that have the `Online` status.

path name

The path name consisting of the following four elements, separated by periods:
- Host port number (hexadecimal number)
- Bus number (hexadecimal number)
- Target ID (hexadecimal number)
- Host LU number (hexadecimal number)

A path name is used to identify a path.
(See also: *host LU number*)

R

remote management client

A machine that connects to a host via a LAN, and uses commands and utilities to control it.

reservation

The reservation function enables a host to declare that it has exclusive rights to use a particular LU, and prevents other hosts from accessing that LU. Access permission for an LU that has been reserved is given only to the host that issued the reservation, so the LU cannot be accessed from multiple paths (coming from multiple hosts) simultaneously. However, because of this, load balancing is not possible.
(See also: *persistent reservation*)

S

SAN (Storage Area Network)

A high-speed network connecting hosts to storage systems. This network is independent of a LAN and is dedicated to data transfers. A SAN provides faster access to storage systems, and prevents the transfer of high-volumes of data from deteriorating LAN performance.

SCSI device

A SCSI disk device.

SLPR (Storage Logical Partition)

A function for logically splitting up a storage system. This function splits up the resources, such as ports, CLPR, and volumes, in the storage system, so that the user can manage each resource independently.

Index

E

F

G

H

I

J

L

M

N

O

P

R

S

T

U

V

W

Hitachi Vantara

Corporate Headquarters
2535 Augustine Drive
Santa Clara, CA 95054 USA
HitachiVantara.com | community.HitachiVantara.com

Contact Information
USA: 1-800-446-0744
Global: 1-858-547-4526
HitachiVantara.com/contact